GUILD ◆ EDITION

Woodsmith®

Woodsmith.com

Vol. 39 / No. 233

CUTTING BIG DOVETAILS ON THE BAND SAW

Also:

7 Handy Shop Accessories under $50

Secrets to Splinter-Free Table Saw Cuts

A Guide to Bowl & Tray Router Bits

Make it Mobile Choosing the Right Casters

A Publication of Cruz Bay Publishing, Inc.

Woodsmith®

EDITOR Vincent Ancona
MULTIMEDIA EDITOR Phil Huber
ASSOCIATE EDITOR Robert Kemp
ASSISTANT EDITOR Erich Lage

EXECUTIVE ART DIRECTOR Todd Lambirth
SENIOR ILLUSTRATORS Harlan V. Clark, Dirk Ver Steeg, Peter J. Larson
SENIOR GRAPHIC DESIGNER Bob Zimmerman
GRAPHIC DESIGNER Becky Kralicek

ASSISTANT DESIGN DIRECTOR Chris Fitch
PROJECT DESIGNERS Dennis Volz, Dillon Baker
PROJECT DESIGNER/BUILDER John Doyle
CAD SPECIALIST Steve Johnson
SHOP CRAFTSMAN Dana Myers

SENIOR PHOTOGRAPHER Crayola England
ASSOCIATE STYLE DIRECTOR Rebecca Cunningham
SENIOR ELECTRONIC IMAGE SPECIALIST Allan Ruhnke
PRODUCTION ASSISTANT Minniette Johnson
VIDEO EDITOR/DIRECTOR Mark Hayes

FOUNDING EDITOR Donald B. Peschke

Woodsmith® (ISSN 0164-4114) is published bimonthly by Cruz Bay Publishing, Inc., 2200 Grand Ave, Des Moines, IA 50312.
Woodsmith® is a registered trademark of Cruz Bay Publishing.
Copyright© 2017 Cruz Bay Publishing, Inc. All rights reserved.
Subscriptions: Single copy: $6.95.
Canadian Subscriptions: Canada Post Agreement No. 40038201. Send change of address information to PO Box 881, Station Main, Markham, ON L3P 8M6. Canada BN 82564 2911
Periodicals Postage Paid at Des Moines, IA, and at additional offices.
Postmaster: Send change of address to *Woodsmith*, Box 37274, Boone, IA 50037-0274.

Printed in U.S.A.

WoodsmithCustomerService.com

ONLINE SUBSCRIBER SERVICES

- **VIEW** your account information
- **RENEW** your subscription
- **CHECK** on a subscription payment
- **PAY** your bill
- **CHANGE** your mailing or e-mail address
- **VIEW/RENEW** your gift subscriptions
- **TELL US** if you've missed an issue

CUSTOMER SERVICE Phone: 800-333-5075 weekdays

SUBSCRIPTIONS
Customer Service
P.O. Box 842
Des Moines, IA 50304-9961
subscriptions@augusthome.com

EDITORIAL
Woodsmith Magazine
2200 Grand Avenue
Des Moines, IA 50312
woodsmith@woodsmith.com

ACTIVE INTEREST MEDIA

PRESIDENT & CEO **Andrew W. Clurman**
SENIOR VICE PRESIDENT, TREASURER & CFO **Michael Henry**
EXECUTIVE VICE PRESIDENT, OPERATIONS **Patricia B. Fox**
CHIEF INNOVATION OFFICER **Jonathan Dorn**

from the editor

Sawdust

As I write this, it's 102° outside our offices in Des Moines, Iowa. So it's not easy to think about winter. But before we know it, Christmas will be rolling around the corner. And that usually means one thing to a woodworker — a frantic, mad dash to get that final coat of finish on a gift project so that it's dry by Christmas morning. To help you get a head start on your gift projects this year, we've included a couple of ideas. The first is a set of classic board games: checkers, cribbage, and an ancient game known as *mancala*. All three of these fold up for storage or to take on the road. The second project is an assortment of miterless picture frames. The three frames are all very different in style, so hopefully you'll find one that suits your taste. And even if you're a hard-boiled procrastinator, any one of these games or picture frames can be built fairly quickly, in the case of a gift-giving "emergency."

CHANGES. I'd like to mention a couple of changes we've had here on the staff of *Woodsmith*. For starters, Bryan Nelson, our editorial media director, recently retired. He and his wife are planning to take a well-deserved break and travel the country in their *Airstream* trailer. Bryan had been with *Woodsmith* for over 21 years. His dedication and hard work is appreciated by all of us here. He will definitely be missed, but we wish him well in his golden years.

With Bryan's departure, I've picked up the duties of editor. I've been with *Woodsmith* for as long as Bryan, so I'm not exactly a newcomer to the magazine. But I have some pretty big shoes to fill, left behind by all those who have held this position before me. My goal is to continue to deliver the great project plans, tips, and techniques that you've come to expect from *Woodsmith*.

Additionally, Phil Huber, our senior editor, is now our multimedia editor. Phil will continue to work on the magazine side of things, but has also been tasked with overseeing all of our future digital, video, and social media efforts. His plate is quite full at the moment, but he already has some exciting ideas in the works.

If there's a project or article idea that you'd like to see, or you have some suggestions on ways we could make *Woodsmith* even better, please drop me a line or send me an email (vancona@aimmedia.com) and let me know. I can't promise we'll be able to act upon every request, but I'd love to hear your ideas.

Vince

contents

No. 233 October/November 2017

Projects

weekend project

Board Games 18

Each one of these three classic board games folds up for storage or travel. They incorporate similar construction techniques, so building one or all three is a snap.

shop project

Table Saw Storage Cart 24

This simple cart provides flexible storage options for your commonly used table saw accessories. As an added bonus, it features a pair of sleds for crosscutting and miter cuts.

gift project

Miterless Picture Frames 30

Looking for an attractive, easy-to-build project for a last-minute gift? Any one of these three picture frames will fit the bill. And the best part is that you won't have to cut any miters.

shop project

Auxiliary Vise 34

This multi-purpose vise mounts into an existing dog hole on the top of any workbench to provide a range of clamping options that you won't find in traditional bench vises.

heirloom project

Hall Bench 42

Storage is the order of the day with this hall bench. But the detail that will most likely catch your eye is the reclaimed barn boards that are used for the back and door panel.

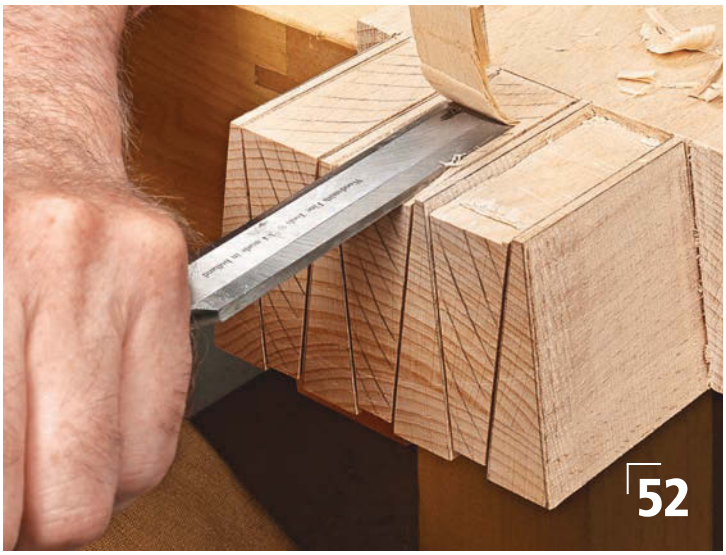

Departments

from our readers
Tips & Techniques 5

all about
Casters. 10

router workshop
Bowl & Tray Bits 12

great gear
7 Shop Gadgets Under $50 14

woodworking technique
Installing Barrel Hinges 16

woodworking technique
Dovetails on the Band Saw 52

working with tools
Rabbets on the Jointer 56

in the shop
Tools for Metalworking 58

woodworking essentials
Avoiding Tearout. 60

mastering the table saw
Zero-Clearance Inserts 62

tips from out shop
Shop Notes 64

questions & answers
Acme Threaded Rod 66

from our readers

Tips & Techniques

Glue Dispenser

Spreading glue on a lot of parts means working quickly. I used to pour a puddle of glue on a scrap of cardboard and dip into it with a brush. That works fine for small projects, but it gets messy when the brush starts to tack up and stick to the cardboard.

I decided to control the chaos by making the glue station you see in the photo at right. It all starts with a collection of used dessert cups. I save these and used them for glue and epoxy applications.

The station has two holes in an easy to clean plastic laminate top, one to hold the glue that I'm using at the moment. The other is for water to set the brush in so I don't have to wash it right away. Shallow grooves routed in the sides make good hand grips. The holes in the station are sized to support the lip of the cups. The lip on the cups hold them in place. When the glue dries, you can often pop it out and reuse the cup.

Hermie Tolerba
Sugar Land, Texas

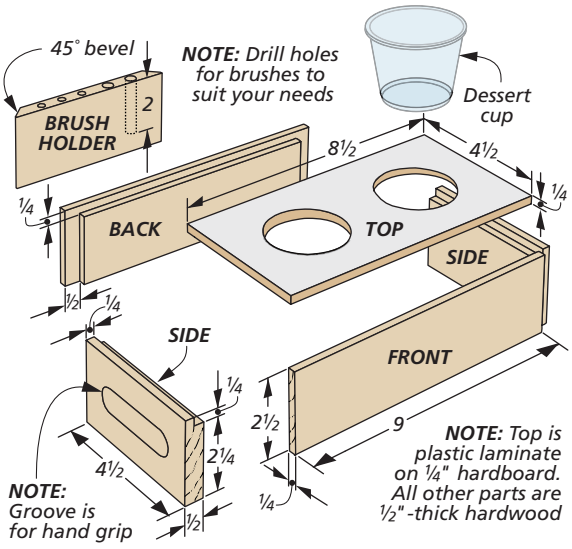

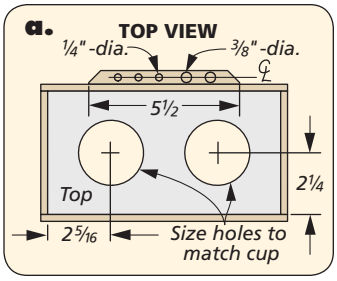

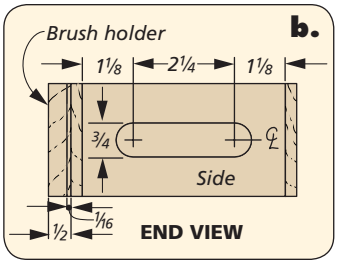

Win This Forrest Blade

Simply send us your favorite shop tips. If your tip or technique is selected as the featured reader's tip, you'll win a *Forrest Woodworker II* blade. To submit your tip or technique, go to *SubmitWoodsmithTips.com*. There you can upload your tips and photos for consideration.

The Winner!

Congratulations to Kelly Churchill, the winner of this *Forrest Woodworker II*. To find out how you can win this blade, check out the information at left.

A Fan Tower for Air Movement

Between the dog days of summer, and moving out the fumes that accumulate when finishing a project, I needed to keep the air moving in my shop. So I made a simple air exchanger by stacking a couple of inexpensive box fans into the setup that you see at left.

The tower itself is a plywood frame attached to a base that's mounted on a set of casters. The fans are held in place with brackets that are shown at right below. Since the tower is mobile, it allows me to focus the air-flow. A simple power strip attached to the side of the tower provides a place to plug the fans in (inset photo).

When shopping for the fans, I found a style that has the control knob on the face of the fan. This allowed me to size the frame to match the dimensions of the fan. You might have to adjust the frame and supports to fit the fans that you use.

Kelly Churchill
Medford, Oregon

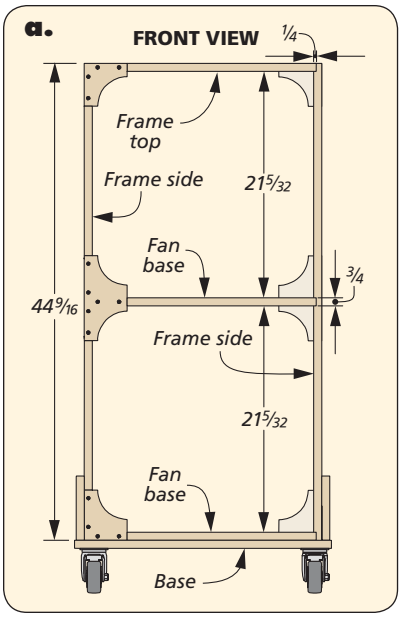

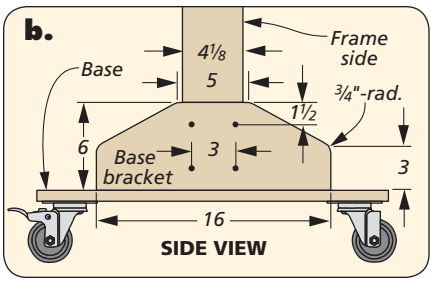

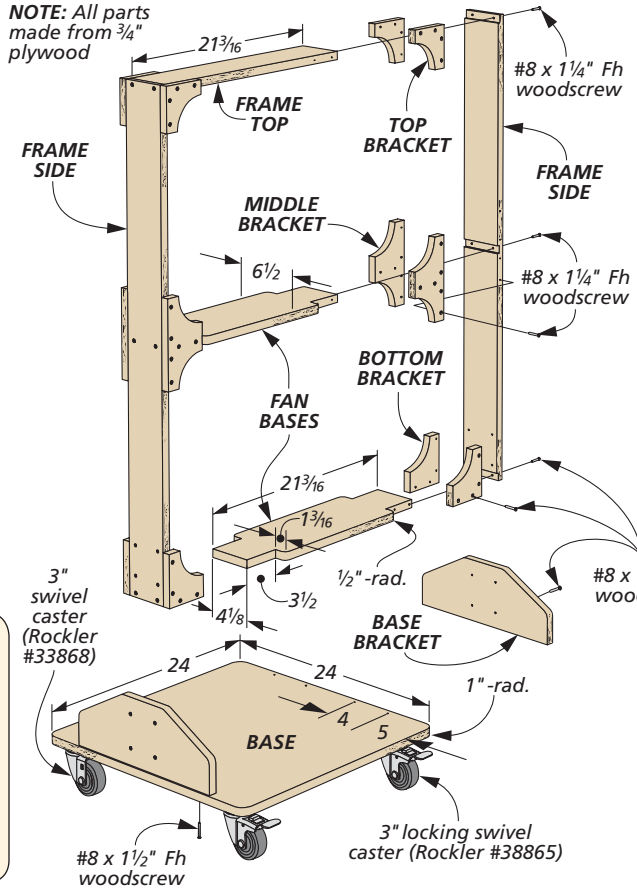

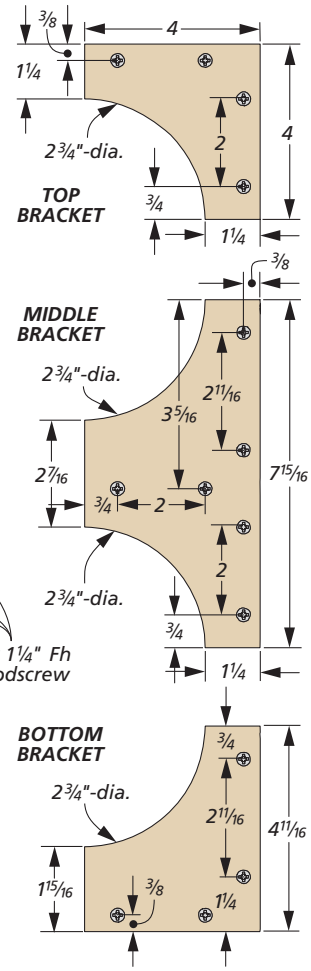

▲ To create the opening for the tube, clamp two pieces of identically sized MDF to the drill press fence.

▲ The blade is held in place with a piece of double-sided tape. Next join the halves and clamp them in your vise.

▲ To start, push the tube through the opening without turning or twisting it. Once clear, pull the remaining length through the block.

Slicing Plastic Tubing

Using clear plastic tubing to protect the teeth of a table saw blade is a great idea. I found a simple solution to the dilemma of slicing one side of the tube straight and safely.

All it takes is a couple of scrap pieces of MDF, a piece of double-sided tape, and a blade from a utility knife. The photo above left shows you where to start. I used a brad point bit that is just slightly bigger than the tube I was going to slice.

Just sandwich the blade between the MDF, using tape to hold it in place (middle photo). Then clamp the block in your vise and pull the tube through.

Bill Bayman
Waynesboro, Pennsylvania

▲ The Allen wrenches for my band saw are out of the way when operating the tool, but still easy to access.

▲ The block can be used to store more than just tools. It also makes a handy pencil holder.

Shop Tool Wrench Caddy

Almost every large stationary tool in my shop came with a small set of tools to make adjustments — wrenches (some metric, some SAE) screwdrivers, and chuck keys. But few are labeled with size or use description. And sadly, none of the machines came with a place to conveniently store the tools.

As a solution, I use small pieces of plywood with properly sized holes to fit the accessories for each tool. Then I fit a rare-earth magnet in the back. Now, whenever I need to make an adjustment, the appropriate tool is right at hand.

Geoffrey Strauss
Endicott, New York

DIGITAL WOODSMITH

SUBMIT TIPS ONLINE

If you have an original shop tip, we would like to hear from you and consider publishing your tip in one or more of our publications. Jump online and go to:

SubmitWoodsmithTips.com

You'll be able to tell us all about your tip and upload your photos and drawings. You can also mail your tips to "Woodsmith Tips" at the editorial address shown on page 2. We will pay up to $200 if we publish your tip.

RECEIVE FREE ETIPS BY EMAIL

Now you can have the best time-saving secrets, solutions, and techniques sent directly to your email inbox. Just go to:

Woodsmith.com
and click on,
"Woodsmith eTips"

You'll receive one of our favorite tips by email each and every week.

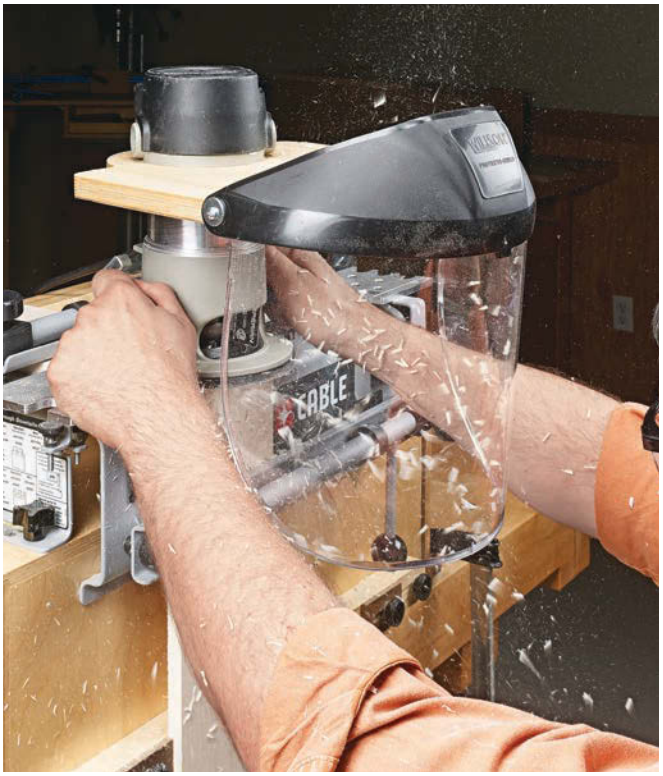

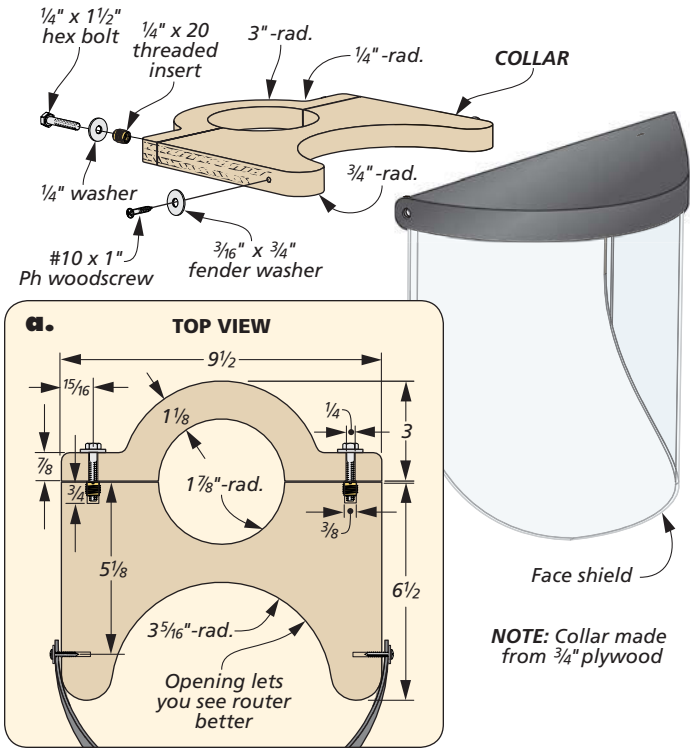

Router Chip Deflector

I enjoy using my dovetail jig any chance I get. But it does kick out a lot of wood chips. It's not a problem for my eyes, my safety glasses take care of that. It's more about my apron pockets. They fill up after a while and depending on the number of drawers I'm making, it gets annoying.

I came across a solution for this when the head strap on my lathe face shield broke. Instead of discarding the shield, I made a collar that fits around my router motor and attaches to the face shield (photo above). This setup deflects the wood chips to the shop floor instead of filling my apron pockets.

The collar is piece of plywood with a hole the diameter of the router cut into it. Cutting it in two was followed by making a large opening in the front of the collar at the band saw. This gives me a better view of the router when in operation.

Jim Barclay
Rochester, New York

QUICK TIPS

Chisel Rasp. *John Doyle, Ankeny, IA,* creates a custom rasp that works well in one-of-a-kind settings. He applies adhesive-backed sandpaper to a chisel that fits the opening he's trying to modify. Using different grits of sandpaper lets him control how aggressive the cut is.

Hook for Accessories. To keep tools for the table saw close at hand, *Robert Patterson* of *Wisconsin Rapids, WI,* attaches a magnetic coat hook (available at a local home center) to the side of the cabinet. He finds it a good place to hang a hand broom or push stick (inset photo).

Smartphone Case Revisited

A while back I made a case to hold my phone while using an app for setting angles. As you can see in the photo below, it works great for that. (Editor's Note: This tip originally appeared in *ShopNotes* magazine.)

But recently, I made a simple modification to the case to make it even more useful. By adding a nut to the bottom of the case, I can attach it to a tripod. As you can see in the main photo, this lets me record the building process. I do this because over the years I've developed some great friendships with guys who, like me, love spending time in the shop.

Recently, several of the fellows from the group have moved across the country and are out of the "loop" of our shop talks. This problem was solved by recording the steps along the way with our smartphones and posting the videos on social media.

BUILD THE CASE. The drawings shown here give a pretty good overview of how the smart phone case is put together. First, cut four strips of wood the same thickness as the phone. Using the phone as a template, glue the strips to a ¼" hardboard bottom that is slightly oversize. Cut another piece of hardboard for the top and cut the openings for the screen and the phone's buttons.

Dowels hold the top in place. Trim the hardboard edges with a flush-trim bit and then drill the holes for the magnets. To finish the case, I epoxied a nut in the bottom that lets you attach the holder to a quick-release plate that mounts to your tripod (detail 'b').

Min-Hao Kuo
East Lansing, Michigan

▲ The case was made to protect my smartphone while checking angles on the table saw.

▲ The case attaches to the tripod via a quick-release plate that locks into the base of the tripod.

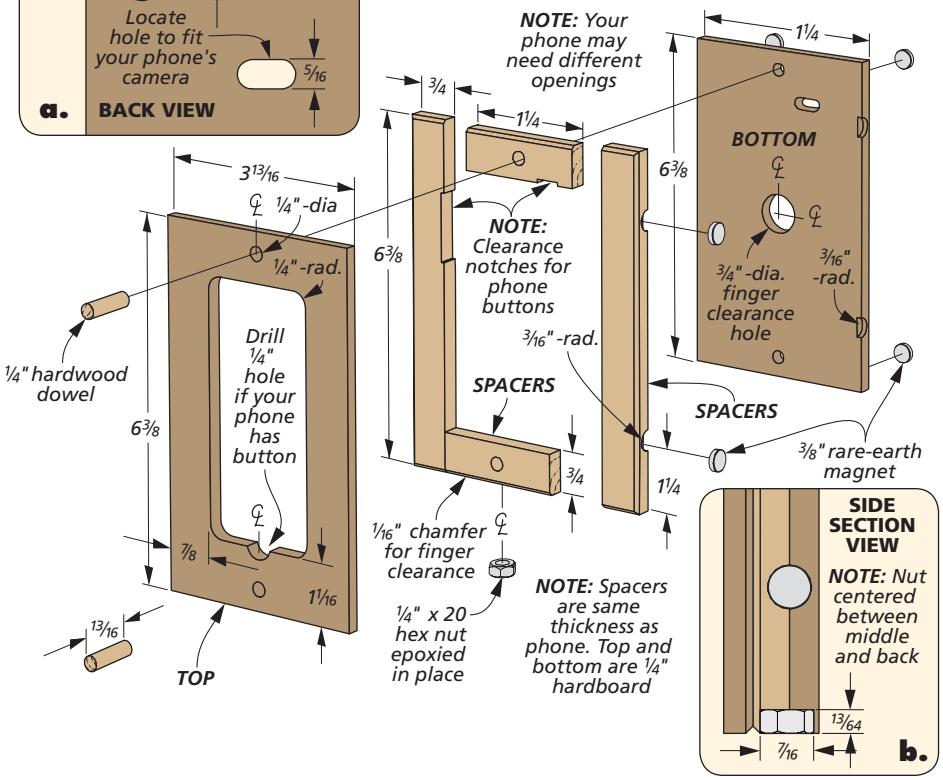

all about

going mobile

Casters in the Shop

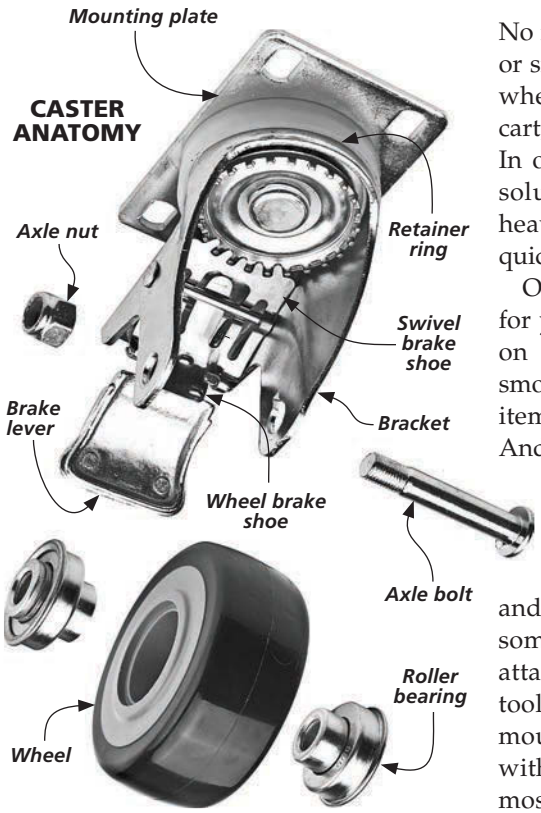

No matter whether your shop is large or small, there's going to come a time when you need to move a machine, cart, or workbench to a different spot. In order to save your back, the best solution is to keep your large and heavy items mounted on casters for quick and easy mobility.

Of course, choosing the right caster for your specific application depends on several variables. Is your floor smooth or bumpy? How heavy is the item that you need to make mobile? And how maneuverable does the item need to be once it's on wheels?

DESIGN SIMILARITIES. Almost all casters have a few things in common — a wheel, an axle and bracket to hold the wheel, and some type of mounting system for attaching the entire assembly to a tool or cabinet. While there are stem-mounted casters that work for items with skinny legs (think router tables), most casters utilize a plate for secure mounting to a cabinet, like all of the casters shown in this article. From here, it's good to point out a few of the differences in caster design.

FIXED & SWIVEL. The two main types of casters are the fixed-wheel and the swivel-wheel styles. Fixed wheels, like the plastic-wheeled version shown at the top of the next page, only move in a straight line. Swivel casters can rotate 360°, offering more versatility. The photo above shows a commonly available swivel caster.

Fixed casters are more efficient when traveling in a straight line. But swivel casters make it easier to park tools in tight places. Sometimes, a combination of the two types of casters gives you the best results. I'll talk a little more about picking the right caster combination for your needs later on.

LOCK'EM IN PLACE. While there are casters available with no locking mechanism, most of the time you're going to want a way to lock your tool

Plastic, fixed

Rubber, single-locking

Polyurethane, single-locking

Polyurethane, double-locking

Steel, swivel

or cart in place once it's moved. With that in mind, a more in-depth look at lock types is warranted.

SINGLE-LOCKING VERSIONS. As their name implies, single-locking casters (like the two types shown above), prevent the wheels from turning. The cam-style lock on the right requires you to reach down to engage the lock by hand. The version on the left has a simple foot lever that is much more user friendly.

But these single-locking casters only stop the wheels from turning, not from swiveling. This makes for a less than stable platform, especially when a tool is mounted on top.

DOUBLE-LOCKING VERSIONS. This is where a double-locking caster is superior in several ways. It still functions much the same as a single-locking caster with the foot-controlled lever. But when engaged, it stops the wheel from rolling *and* stops it from swiveling.

It accomplishes this through the use of a swivel brake shoe that meshes with the "teeth" on a bearing retainer ring when the lock is depressed. These parts can be seen in the anatomy photo on the previous page. When engaged, this creates a truly locked caster that's almost as stable as a fixed stand.

MATERIAL OPTIONS. As you can see above, casters are available with wheels made from a variety of materials — from the inexpensive plastic wheels, to the more durable rubber and polyurethane wheels. You can even find all-steel wheels. But unless you have a need to support an incredible amount of weight (over 1,000 lbs.), you can probably skip these and go with the more versatile polyurethane wheels. Polyurethane wheels are generally non-marring to floors, and they're impervious to a lot of harmful chemicals.

SIZE MATTERS. And if you need to support a heavier weight, you can generally buy a larger size wheel to match your need. You'll also have the benefit of getting a smoother rolling caster with the bigger size.

WORKBENCH CASTERS. If you need to make your workbench mobile, but still want it to sit flat on the floor when in use, then consider a set of these workbench casters shown below. Pushing down on the lever raises the bench off the floor. Simply flip them up when done to lower the bench back down.

Making your shop mobile doesn't have to be hard. Just arm yourself with a well-rounded knowledge and get rolling. W

▲ Workbench casters allow you to raise your bench to move it around, then lower it firmly on the floor for use.

How-To: PICK THE RIGHT COMBINATION

After deciding on a caster style, you might be wondering which casters to use where. What you'll find is that different combinations and configurations produce surprisingly different results when you're trying to move stuff around. Here are a couple of different setups that I've found useful over the years.

FOUR SWIVEL. In a crowded shop, using swivel casters at all four corners may be the best setup. You can spin the cart or tool 360° and change directions quickly. However, it's not good for longer distances because it's hard to get all of the casters heading in the same direction.

TWO FIXED, TWO SWIVEL. This setup is what most people are familiar with because it steers just like a car. It provides good stability, and it's easy to keep straight as you push it across the shop. It's not the best arrangement, though, when you have to maneuver in tight spaces and parallel park.

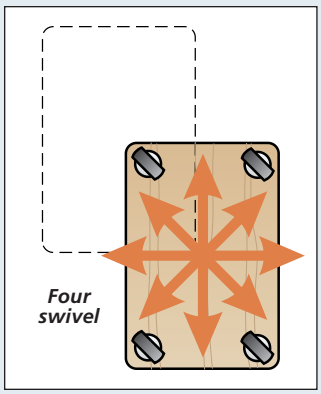

Easy Turns. Maneuverability is quick and easy with this caster configuration.

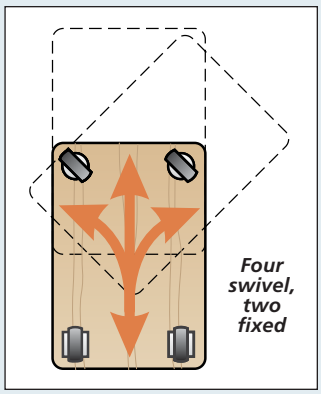

Distance. This setup works best for longer moves around the shop.

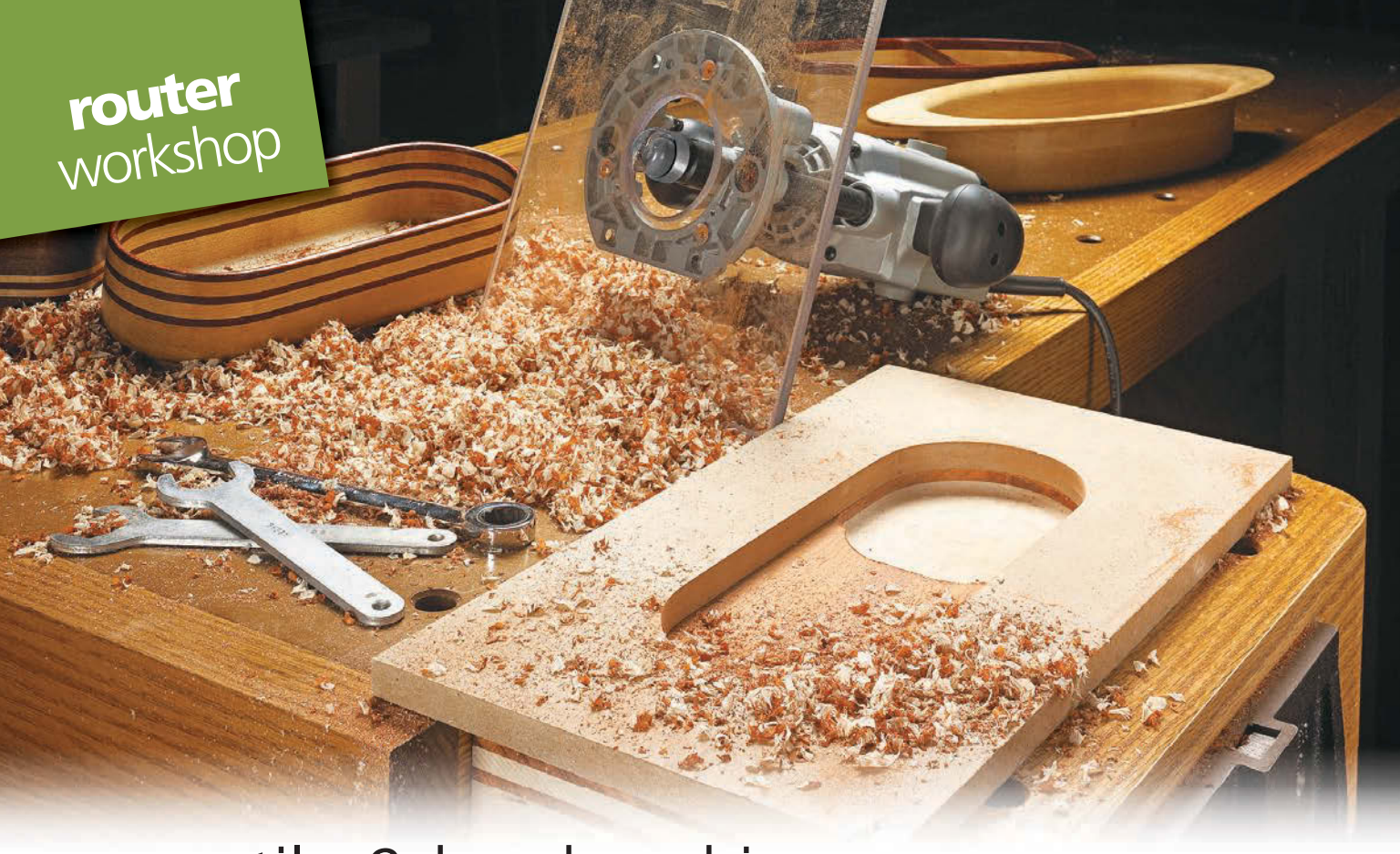

versatile & hardworking

Bowl & Tray Bits

Flipping through the router bit section of a woodworking catalog, I have the same feeling as when I was a kid perusing the Christmas toy catalog. Almost every bit seems like a must-have. While there are several bits in the drawer that have never been used, one that's turned out to be a real winner is a bowl and tray bit, like the ones you see below.

Like many woodworkers, I bought one to make router-carved bowls. The bit works great for that, but it's the other things that it can do that makes it so valuable (more on this later).

UNIQUE CHARACTERISTICS. To get a better handle on what makes a bowl and tray bit versatile, it pays to take a close look at what sets these kinds of bits apart from others. The bits shown in the left photo show three versions by different manufacturers. There's definitely a strong family resemblance. The bits measure about 1¼" in diameter. And as you can see, they may also include a bearing for following a template.

◄ Bowl and tray bits feature large cutting diameters with a lot of mass for smooth cutting.

To my mind, a bowl and tray bit blends characteristics from both a large-diameter straight bit and a core box bit. The sides and bottom of the bit have straight-cutting edges. A radius joins these two edges together.

These features offer a few important benefits. The large, flat lower cutting edges quickly create a smooth, flat bottom on the workpiece that requires very little cleanup. The curved corner of the bit softens the transition of a bowl recess, giving it a pleasing, finished look. In addition, the rounded profile makes it easier to remove items stored inside.

USING THE BIT. Putting a bowl and tray bit to use follows the same approach as most other bits. But its large size and unique profile requires some consideration. For starters, like a lot of bits, it just

isn't possible to rout to full-depth in a single pass. However, a light cut places the bearing well above the surface. The result is that if you're using a template, the template material needs to be thick enough for the bearing to ride against during the initial cut. This is shown in the near right photo.

As you work your way down, the bearing still has plenty of support. Then in order to rout the recess of a deep bowl, you can remove the template and allow the bearing to follow the surface you've already routed (far right photo).

ROUTER SUPPORT. Another consideration is shown in the drawing at right. Even a medium-sized tray or bowl can have a recess that's larger than the base of your router. Supporting the router on just one edge may lead to the bit tipping and spoiling the side of the bowl.

To prevent this from happening, make a large auxiliary baseplate to span the opening. I like to use clear acrylic because it supports the router while still providing a good view of the routing process (main photo on the previous page).

OTHER USES. I've found the unique characteristics of a bowl and tray bit can be put to use in a variety of other ways, as you can see in the box below.

You can create smaller recesses in all kinds of projects to provide a low-profile storage space. The board games on page 18 are a good example of this. I've even used it in the shop (lower left photo).

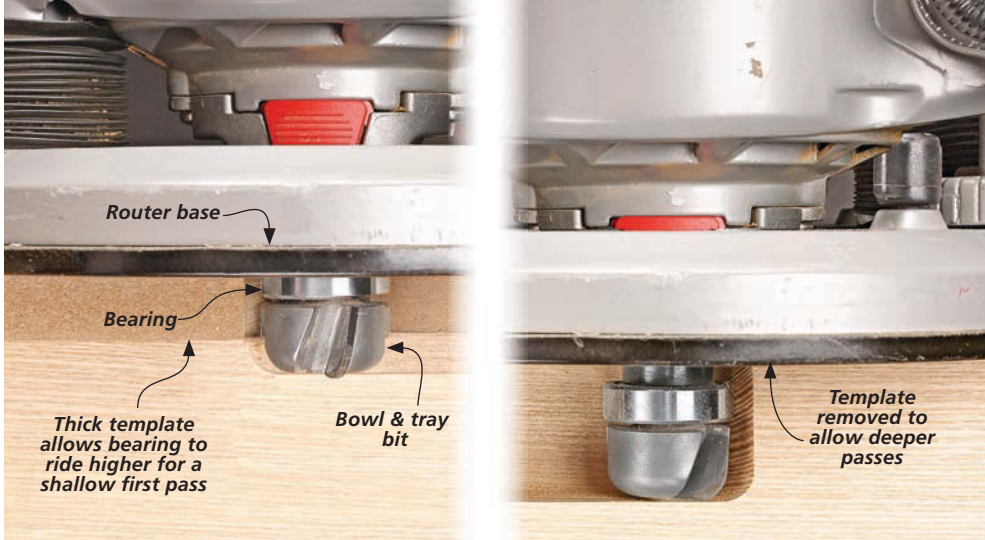

▲ You'll need a thick template to engage the bearing on a bowl and tray bit to make the first few shallow passes on a recess. As the bit gets deeper, the bearing on the bit can follow the surfaces formed in earlier passes to create a deeper bowl.

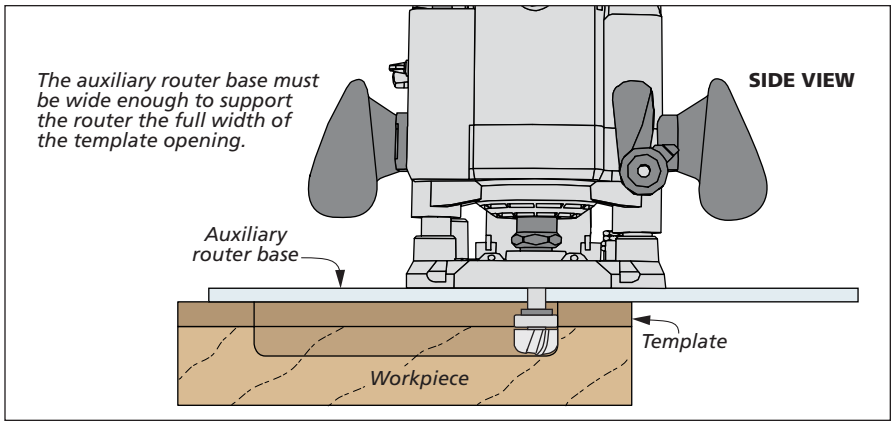

The ability to create a smooth surface means the bit is ideal for planing panels, as in the middle photo below. And the curved edges won't catch when "turning" with your router (lower right photo).

Once you get a bowl and tray bit and put it to use, you'll quickly realize it's more than just a one-trick pony. And you're sure to find yourself reaching for it time and time again. W

There's More: ALTERNATE USES FOR YOUR BOWL & TRAY BIT

▲ A recess in the top of this sawbench keeps marking tools from getting in the way while still being close at hand.

▲ The flat cutting edges of a bowl and tray bit are ideal for creating smooth, flat panels and cutting boards.

▲ A carriage along with a bowl and tray bit transforms your router table into a turning station for creating round parts.

great gear

7 Shop Gadgets under $50

Has someone special in your life been asking you for hints for Christmas gifts this year? Well, we've put together this short list of items that several of us here at *Woodsmith* like to have around in our own shops.

Most of these items weren't things that we'd normally buy for ourselves. (Some were even given to us as gifts.) But once we had them, we didn't want to give them up. Read on to see if there are any you'd like to add to your wish list this year.

▲ Taking inside and outside corner-to-corner measurements (left), as well as laying out arcs (above), is simple using this tape tip.

[1] Assembly Squares

First up is a solid set of assembly squares as shown in the main photo above. Having a couple of these on hand is essential for perfectly square case construction. Available in a couple of different sizes, assembly squares will hold your workpieces at an exact 90° while glue dries, leaving your hands free to install screws.

[2] Countersink Drill Bit Set

A quality set of combination countersink drill bits leads the category in "time-saving" inventions (left photos). These bits allow you to drill a pilot hole for a screw while at the same time drilling the countersink for the screw head. Available for most common screw sizes, the drill bit depth can typically be adjusted to match the length of screw you're using. Plus, the drill bits can be removed for sharpening, or replaced if they break.

◄ Drill the countersink and pilot hole all at one time using this handy combo drill bit set.

[3] Tape Measure Tip

This next little gadget is exactly the type of item you didn't know you needed, until you have it. Simply slip the hook of a tape measure into this auxiliary tape measure tip (a magnet holds it in place) and you can then take accurate inside and outside corner measurements (photos above left).

A hole in the center of the tape tip holds a small nail for laying out arcs and circles as shown in the photo above. And if that weren't enough, a V-notch in one end lets the tape tip double as a marking gauge for laying out straight lines.

[4] Thread Repair Tool

Trying to thread a nut onto a bolt with damaged threads is one of the all-time most frustrating tasks. But instead of reaching for a time-consuming tap and die set, keep one of these thread repair tools on hand to quickly "clean up" marred threads.

Thread repair tools, like the one shown at right, rapidly adjust up or down, for the smallest of screws all the way up to ½"-diameter bolts. The restored threads ensure no more cross-threading nightmares.

▲ Don't throw away damaged screws and bolts. Use a simple repair tool to clean up the threads, and save a little money.

[5] Magnetic Corner Chisel

If you install hinges in routed mortises on a regular basis, you might want to invest in the tool shown in the upper right photo — a magnetic corner chisel. This clever item is designed to be used in conjunction with the included guide block. A couple of rare-earth magnets hold the chisel square to the block. The outside faces of the guide block register against the routed corner of the mortise.

A light tap on the chisel squares the mortise flush with the routed edges. Made from A2 tool steel, the long-wearing blade will clean up a lot of mortises before it ever needs sharpening.

▲ A magnetic corner chisel is the perfect tool for squaring hinge mortise corners quickly and accurately, every time.

[6] Self-Centering Drill Bits

Installing delicate hinges requires a fine touch. And getting the screws centered perfectly in the holes is one mark of quality craftsmanship. One sure-fire way to accomplish this task is with a good set of self-centering drill bits, commonly known as *Vix* bits (left photos below).

These are nothing more than a drill bit encased in a spring-loaded outer sleeve. The sleeve centers the bit on the hinge hole for quick alignment and retracts as the hole is drilled.

▲ A self-centering drill bit set is a must-have item when installing hinges. The outer sleeve aligns the bit with the hinge.

[7] Tethered Pencil Holder

And finally, raise your hand if you've ever set your pencil down in the shop only to forget where a minute later. Pretty much all of us, right? Well, the *Tug-N-Back* tethered pencil holder is here to end those days.

Shown in the middle and right photos below, one end clips to a shirt or apron pocket while the other end has a flexible, tapered "cup" that grips a pencil (regular or carpenters). It can either be set for constant tension — so that the pencil retracts when released. Or chose lock and release mode — this sets it to retract after giving the cord a slight tug. It's a guaranteed way to always keep your pencil handy.

All of these items are available for under $50 (some, much less). Check out Sources on page 67 to find out where to buy any of these cool gadgets. And then strategically leave your issue open to this page.

You might even want to circle your favorites. Who knows, maybe Santa will fill your stocking with something for the shop this year. W

▲ This retractable holder ensures that you'll never "misplace" your pencil again.

perfect-fitting Barrel Hinges

One of the challenges of building any project is choosing the right hardware. This is especially true when it comes to hinges. It's not for a lack of choices by any means. The key is to find the hinges that are best suited for your project. In the case of the games on page 18, barrel hinges fit the bill.

The barrel hinges that are used in all three game boards are a member in a family of specialty hinges known as concealed hinges. One of the main suppliers and inventor of these hinges is *Soss*, a hinge manufacturer that created the first concealed hinge a little over 100 years ago.

While their larger siblings are used in heavy-duty environments from fancy boardrooms to battleships, these barrel hinges are designed for light-duty uses where there's no structural stress (vertical loads) on the hinges.

Barrel hinges range in size from 8mm to 24mm in diameter and are made from solid brass. The lower left photo gives you a clear idea of what this hinge looks like. The brass barrels are tied together with four leaves. As you can see in the drawing below, all of the leaves are held together and pivot in the center on a small rod. The outer leaves are attached to a barrel at one end. At the other end, they're pinned to one of the middle leaves. The pin rides up and down in a groove inside of the barrel. It's this scissor-like action that allows the hinge to open and close.

The barrel is a serrated cylinder that has a tensioning screw on one side. After the hinge is installed, you tighten the screw which spreads out the bottom end of the barrel, locking it into its mortise.

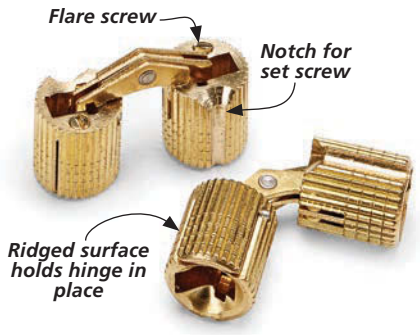

▲ The ribs on the exterior of the barrel hinge are designed to bite into the drilled mortise that houses them.

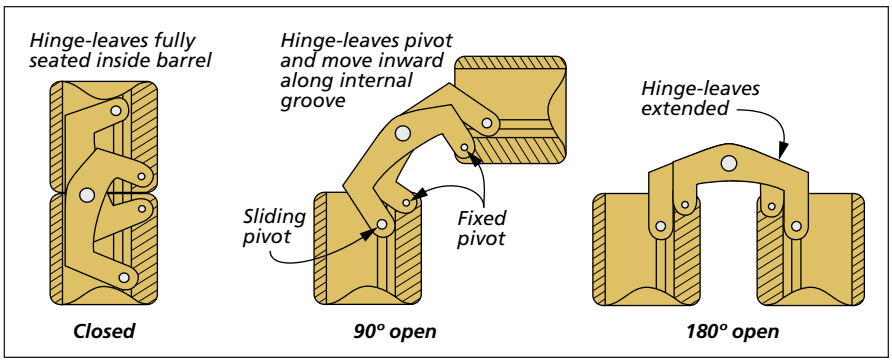

Opposite this is a notch that lets you add an optional set screw once the hinge is installed. The mortise is just a hole made with a bit that is specifically sized for the hinge you're using.

BEYOND OPEN & SHUT. I chose concealed hinges for functional reasons. I installed the hinges in a manner that let me store all the accessories of the games when not needed. To do this means attaching the hinges to the edges of the boards in the 180° open position (as shown in the drawing on the previous page). When the game is open for playing the hinges are in the "closed" position (for the checker and mancala boards). However you choose to employ the hinges, Photos 1 and 2 at right will get you going in the proper direction.

INSTALLATION INFORMATION. As I mentioned earlier, there are multiple sizes of hinges to choose from. Each hinge comes with it's own parameters for mortise hole size, setback from the edge, and other information. Most retailers send a small document along with the hinges to assist you. If this isn't available, you can find instructions on the *Soss* website.

NO WIGGLE ROOM. The hinges I used require a 10mm hole. It's critical that you use the proper size *metric* drill bit for your hinge. These hinges fit perfectly when installed according to the guidelines given. If you try to fudge this by using a fractional bit, the hinge will not seat properly in the mortise and will likely pull out of the hole.

▲ **Layout First.** With a sharp pencil or marking knife, lay out the center point location of the barrel hinges.

▲ **Drill the Mortise.** Use a Forstner bit to drill the mortise for the hinge the proper depth. Check the depth with hinge.

▲ **Epoxy Insurance.** Brush a small amount of epoxy on each of the barrels just prior to installation.

▲ **Tensioning Screw.** Before the epoxy sets, tighten the tensioning screw. Be careful not to overtighten the brass screw.

The depth of the hole is important, as well. If one of the holes is deeper than the other, one of the hinges will bind and not close all the way.

▲ **Pilot Hole.** If you choose to install a set screw, pre-drill and countersink a hole next to the notch in the hinge.

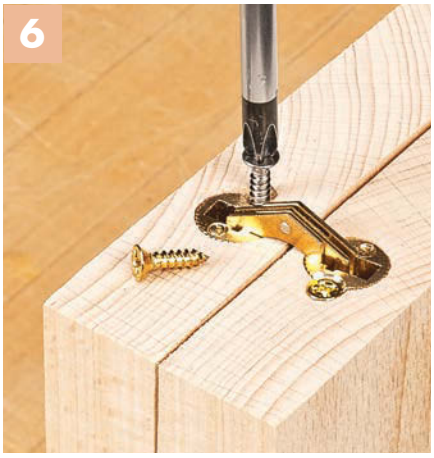

▲ **Install Set Screw.** First, chase the pilot hole with a steel screw, then you can install the brass set screw.

Once the mortise is located and drilled to the proper depth, I slipped the hinges in place. The main reason for this is to do a dry run and see that they open and close smoothly. You want to do this now because the next step involves locking the hinges in place.

EXTRA GRIP. I gave the barrel a light coat of epoxy just prior to installing the hinge. Photo 3 shows this. Then you need to tighten the tensioning screw that's shown in Photo 4 right after the hinge is installed.

You can add another level of strength by drilling a pilot hole next to the notch in the hinge and adding an optional set screw as shown in Photos 5 and 6. Whatever size of these hinges you use on your projects, you can rest assured that following these steps will help hold things together for a long time. W

Weekend Project

folding Board Games

These three games cover all the bases when it comes to simple entertainment for friends and family members of all ages.

Whether you enjoy a classic game of checkers, old-school cribbage, or maybe an exotic romp with *mancala*, these three games will delight the family with hours of offline entertainment. They're all great for road trips as well. This is because all the parts to play each game are stored away in between the boards.

Designing the games to fold up employed a piece of hardware that's not used every day. It's called a barrel hinge and it comes from a family of hinges known as concealed hinges. The barrel hinges hide in the edges of the game boards. So when the game is open in playing mode, like in the photo above, things keep moving smoothly across the game surface.

MANCALA

This ancient word means "to move." That activity is at the heart of this game. The goal is to move as many stones from your (and your opponent's) pots in the middle of the board to your "home" at the end of the board. It's a game that has some simple strategies that kids love.

Making the board is fun in its own right. It all starts with two identically-sized pieces of hardwood (I used zebrawood here). The two pieces are hinged together with barrel hinges. These hinges, along with a some of rare-earth magnets, hold the game closed when not in use. When the game is opened and laid flat, you'll see that each half has

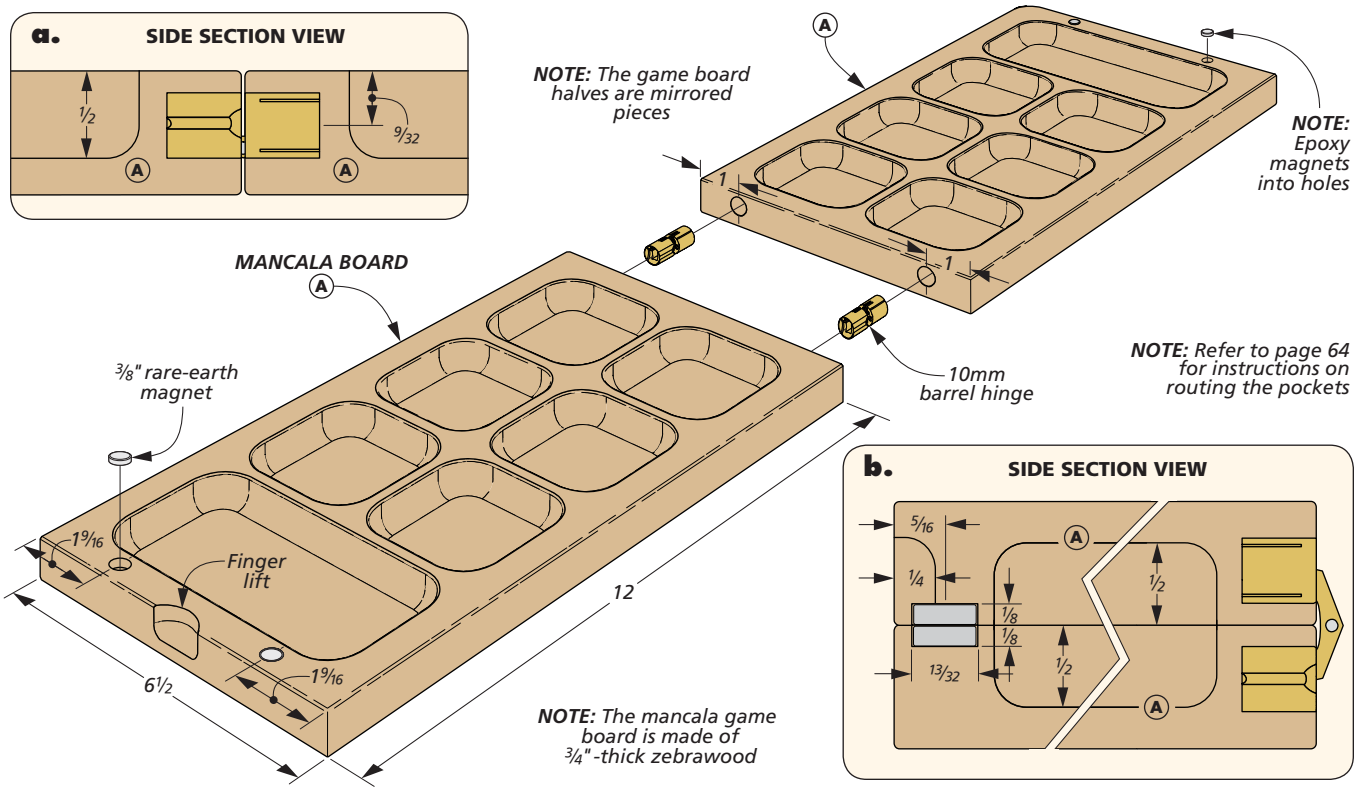

seven mirrored pockets routed into the surface. The smaller pockets, or "pots" are where the stones are placed at the beginning of the game. At either end, there's a long rectangular pocket that's the home I mentioned earlier.

A JIG FOR POCKETS. I started the project by making a jig to rout the seven pockets in each section (Figure 1, below). The details on this jig, how it's made, and how it's used are covered on page 64. I used a bowl and tray bit to make the pockets on this game board (as well as the other games). I also used the same bit to rout the finger lifts in the ends of the boards. Figure 2 below shows this.

HARDWARE. Next up is dealing with the hardware. This involves laying out and drilling mortises for the barrel hinges and the rare-earth magnets (Figure 3).

I started with the hinges. There's information on how to do this on page 16, so I won't spend much time on the subject here. Don't install the hinges permanently at this time, but just insert them in the boards for now. It will make it a lot easier to drill the holes for the magnets.

The most efficient way to tackle this is to lay out and drill the holes in one half of the board. Then, drop some dowel centers in the holes and close the game board to mark their locations on the other half. All the game board needs now is a coat of finish. I chose an oil that wipes on easily. After a couple of coats I installed the hardware permanently.

How-To: BUILD THE MANCALA BOARD

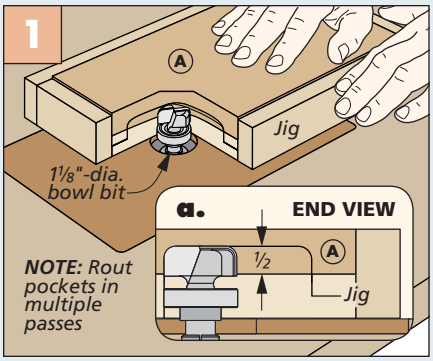

Rout the Pockets. Making the multiple cavities in the game board requires a jig and bowl and tray bit.

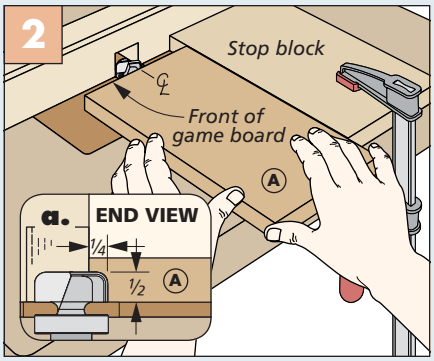

Rout the Finger Lift. A stop block is used to align the center of the game board with the bit.

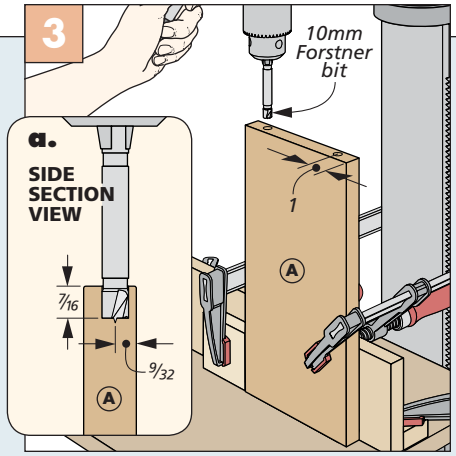

Drill the Barrel Mortise. Clamp the game board to a tall auxiliary fence to ensure proper hole location.

Making the CHECKERBOARD

The checkerboard is made of two identically-sized pieces of maple. One of the halves is hollowed to store the checkers, the other remains solid. The squares on top are separated by grooves made with a router. I'll show you how to make the squares later.

BOARD BASICS. The two halves are held together with barrel hinges. When you combine these hinges with the rare-earth magnets that hold the halves closed, you have a perfect pairing. The board opens flat to play a game, then closes securely when you're ready to store the checkers away.

Sizing the board halves is the first order of business. When done, I turned to creating the cavity to store the checkers (Figure 1). I made a jig that cradles the workpiece and lets me use a bowl and tray bit in the router table. It's a fairly easy process that's covered on page 64. Don't forget to rout the finger lift in the top board piece. I cut this notch opposite the checker cavity. Doing this provides a visual clue for opening the game without spilling checkers (inset photo). When the routing was done, I sanded the cavity smooth and turned my attention to making the game surface.

▲ Thanks to the barrel hinges, when unfolded in the playing position the joint between the two halves of the checker board is seamless. When the game is over, all of the checkers conveniently stow away in the center of the board.

CHECKER PATTERN. There are 32 squares on each half of the game board. That gives us four rows of eight squares per half. Trying to evenly space these squares on the workpieces could prove to be a frustrating endeavor, but there's a simple way of tackling the process. Figure 2 below shows you an overview of how to do this. What you see in that drawing is that I used a radius grooving bit to create the grooves between the squares. This carbide bit cuts a crisp groove that clearly defines each square. There's a series of spacers that help position the workpiece over the bit.

How-To: ROUT STORAGE POCKET & GROOVES

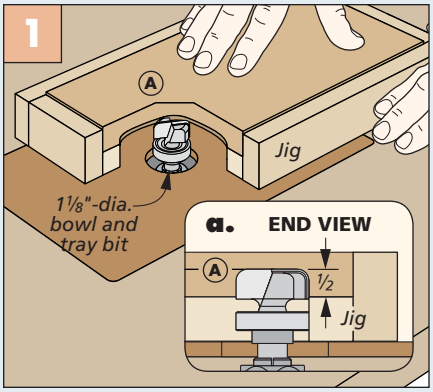

Rout Inside Storage Pocket. The large storage pocket for the checker pieces should be routed in multiple passes.

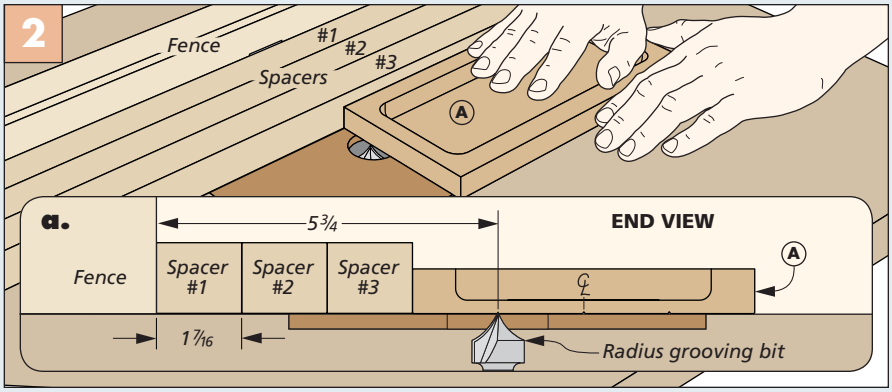

Scoring the Checkerboard Squares. Start by setting the distance between the bit and fence as shown in the detail. Then you will use three spacers to scribe all of the grooves in the checkerboard surface. A step-by-step detail is available online.

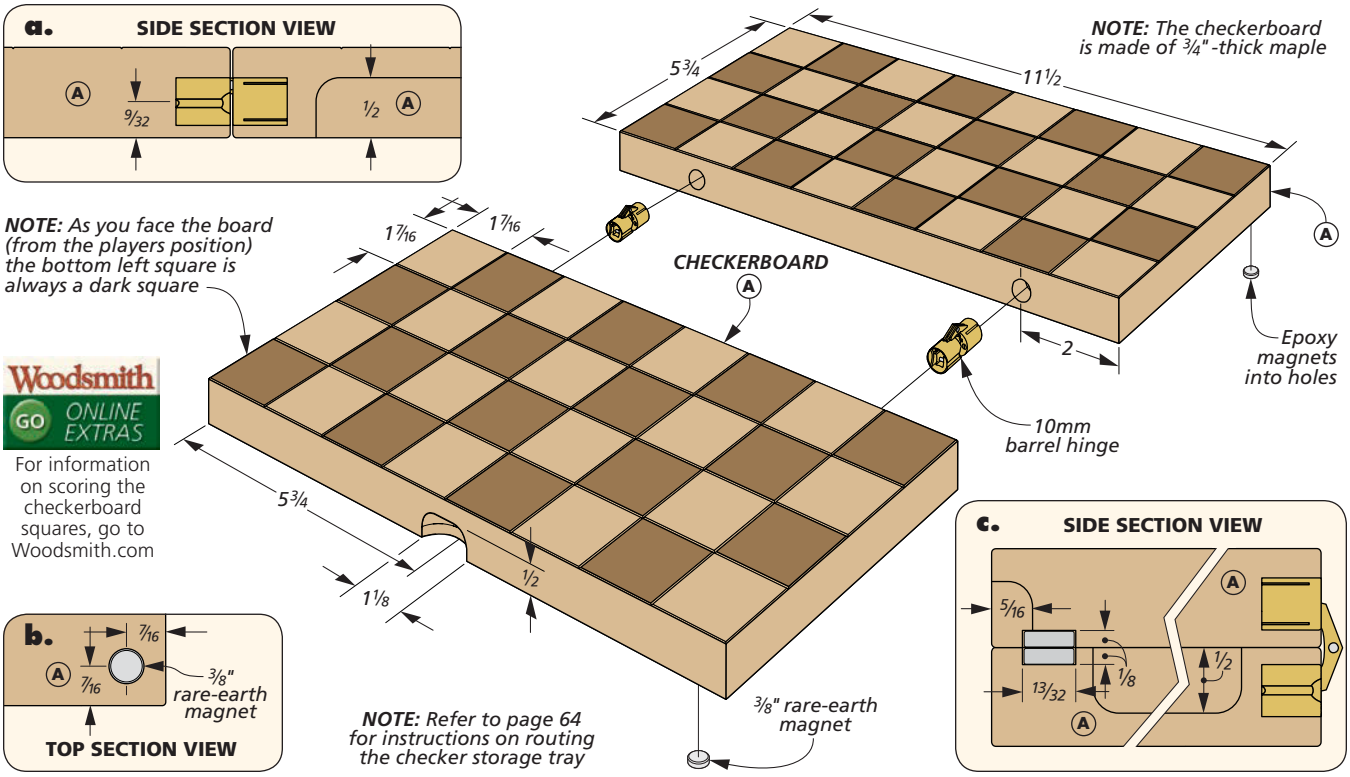

You can see this process in detail at *Woodsmith.com*. With the surface of the checkerboard done (except for the stain and finish), it's time to focus on the hardware — the hinges come first.

HARDWARE. Page 16 gives you some tips on working with these hinges that will save you some time. That being said, don't permanently install the hinges yet, put that off until the stain and finish are dry. There's one thing left to do before that phase though, drill the holes for the magnets. You can tackle this in the same way that you installed the hinges on the mancala game.

STAINING THE SQUARES. On occasion, you come across a step in a project that's going to take some time to complete. Staining the squares is one of those times. But don't be intimidated, the grooves that you made when you routed the squares into the surface are going to be your ally. Start by masking off the entire surface and score the individual squares, using the grooves as a guide (Figure 1). Then remove the tape from half of the squares (the dark ones) and stain them, as shown in Figure 2 and 3. When those are dry, repeat the entire process, this time staining the light squares and the rest of the board. To finish up the checkerboard, I applied a couple of coats of lacquer and installed the hardware permanently.

How-To: STAIN THE CHECKER BOARD

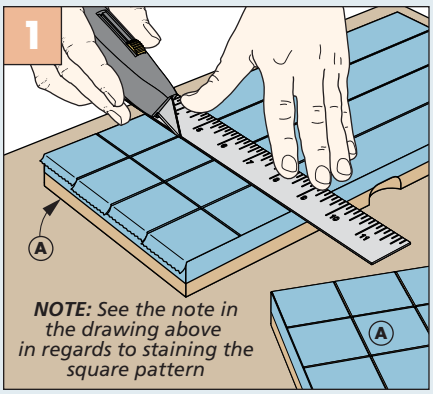

Mask Off Squares. Mask the entire surface and score the squares with a sharp utility knife.

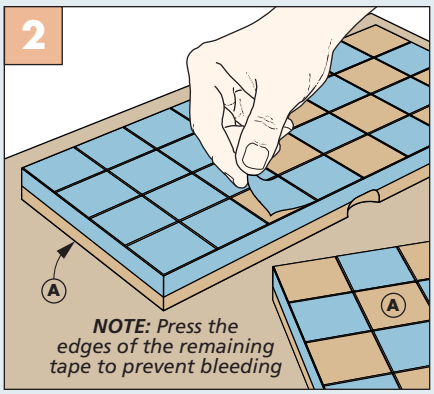

Remove Tape. Remove the tape from alternating squares that will be stained dark. Leave tape on edges.

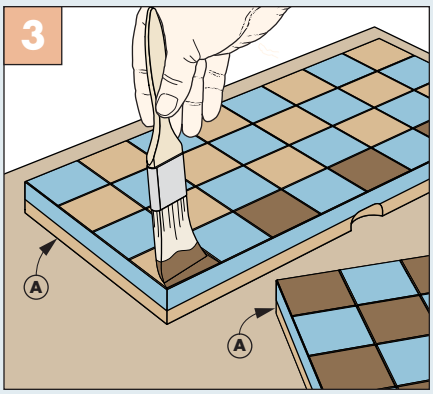

Stain the Squares. To prevent bleeding into the light areas, avoid filling the grooves with dark stain.

Making the CRIBBAGE BOARD

Handsome mahogany makes up both halves of the cribbage board. The top half is the playing surface, while the bottom half is used as storage for a deck of cards and the pegs for the game. The two halves are joined with barrel hinges like the previous games.

ROUT THE STORAGE CAVITIES. Routing the peg and card storage cavities uses a jig similar to the other games. Page 64 shows the details for this. I will mention here that it's important to do a test fit of your deck of cards to make sure they sit beneath the surface so that the game will close tightly. The powerful rare-earth magnets that hold the game closed will help quite a bit, but you don't want to push it too far.

Laying out and drilling the mortises for the barrel hinges is your next job. With the hinges in place (not permanently), I sanded a uniform radius on the outside corners of both halves. As with the other game boards, it's a good time to drill the holes for the rare-earth magnets. Once you've drilled one of the holes, you can use a dowel center to locate the hole in the opposite side. Afterwards, I took the halves apart and turned my focus to the playing surface of the game.

▲ The classic cribbage board game is always fun to play. As you can see above, this is the only game that doesn't incorporate both sides for the playing surface. But as the inset shows, the bottom half is great for storage.

PATTERN TO THE RESCUE. There's no way around it, when it comes to making a cribbage board there are a lot of holes to drill — in a uniform pattern to boot. Not to worry though, there's an orderly way to pull this off. On the right side of the next page there's a pattern that you can enlarge. (Also, there's a full-size pattern available online.)

I chose a method combining the use of the pattern and two spacers. The spacers are 3/16"-thick, which is the distance between each row of holes. Notice in the peg hole pattern on the next page that these rows are grouped into columns. The starting, outer, and

How-To: ROUT THE STORAGE POCKETS & DRILL THE PEG HOLES

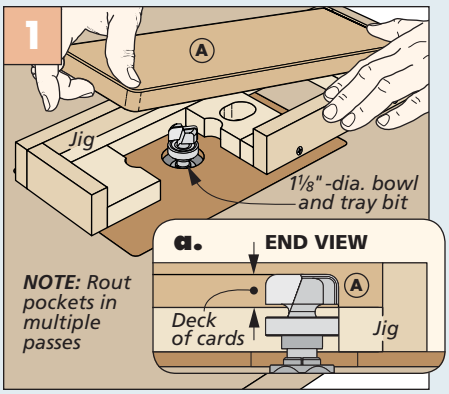

Rout Storage Pockets. Use multiple passes to establish the depth of the pocket that holds the cards and pegs.

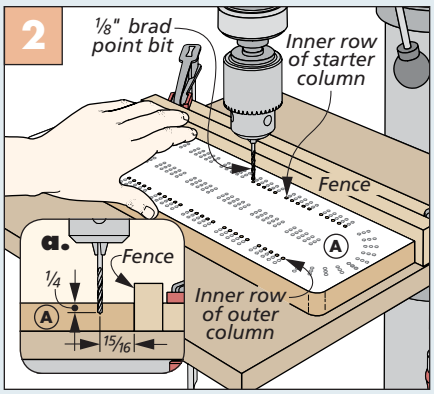

Drilling Holes. After drilling the holes on one side of the workpiece flip the board end for end to drill the other side.

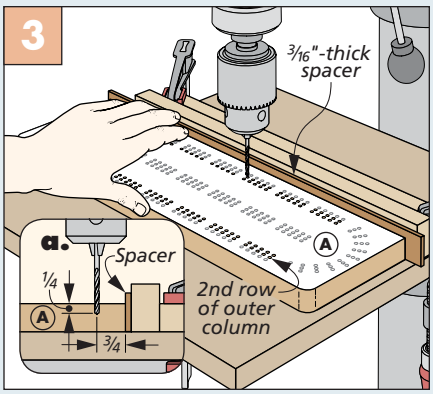

Insert Spacer. The addition of a spacer positions the workpiece to drill the second row of holes.

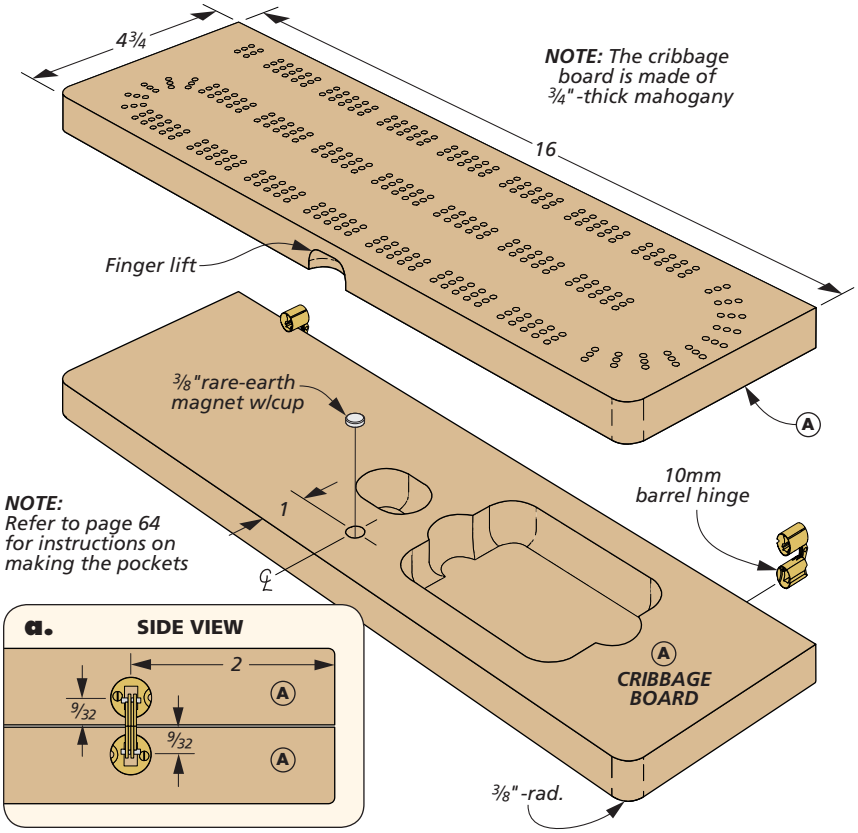

PEG HOLE PATTERN *(enlarge 200%)*

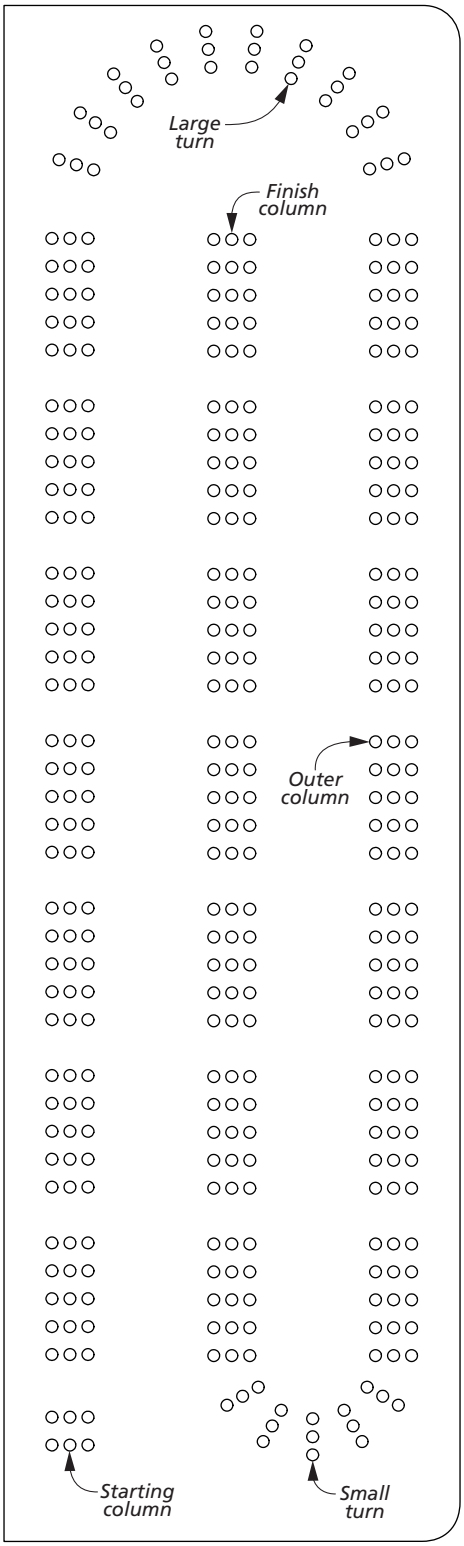

finish columns are tied together by the large and small turns of holes.

DRILLING TACTICS. I attached the pattern to the workpiece with some spray adhesive and moved over to the drill press to start drilling holes. First up were the columns closest to the edge, Figures 2, 3, and 4 shows the sequence. That being done, adjust the fence and drill the finish column. This leaves you with drilling the holes that make up the large and small turns of the game. Do this free-hand following the pattern (Figure 5). Using a sharp 1/8"-dia. brad point bit and a high speed, leaves each hole clean and crisp, eliminating any sanding. When the stain and finish (two coats of lacquer) are dry, you can install the hardware. And school some kids in old-world games. W

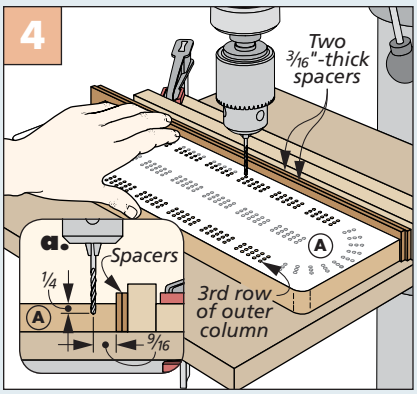

Another Spacer. Add a second spacer to drill the third row of holes in the starting and outer columns.

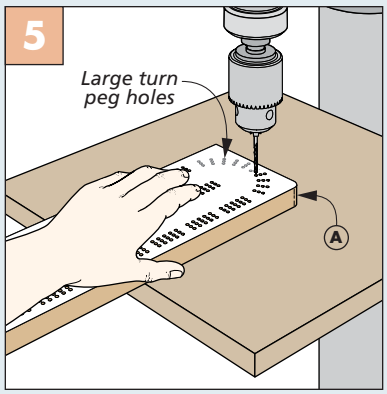

Drill Large & Small Turns. Take your time when it comes to drilling the turns in the game board.

Woodsmith GO ONLINE EXTRAS For a full-size pattern for the cribbage board go to Woodsmith.com

Shop Project

table saw Storage Cart

A storage cart that tucks away under the extension wing of a table saw isn't exactly a new idea. But this one adds a unique twist.

It seems like whenever I need to make a rip cut that's wider than say 10", I start by having to clear off all the stuff piled on top of my table saw. Push blocks, featherboards, saw blades, and even jigs all seem to take up residence on the non-working side of my rip fence.

The obvious answer is to add storage below the extension wing of the saw. In fact, we've featured several of these types of projects in the past. This storage cart is a little different though.

STORAGE OPTIONS. A drawer just under the top of the cart provides a handy place for storing many of the most-often used saw accessories. But it's the storage area below the drawer that is really interesting. Rather than just an open compartment with a shelf or two, a door opens to reveal several slide-out pegboard panels. This vertical storage design allows you to fit a large number of items in a compact space.

SLEDS. As a bonus, the cart includes a pair of sleds that stow away inside the case. You can see one of these in action in the left photo on the next page.

Construction Overview / OVERALL DIMENSIONS: 21⅝"W x 30⅝"H x 30¼"D

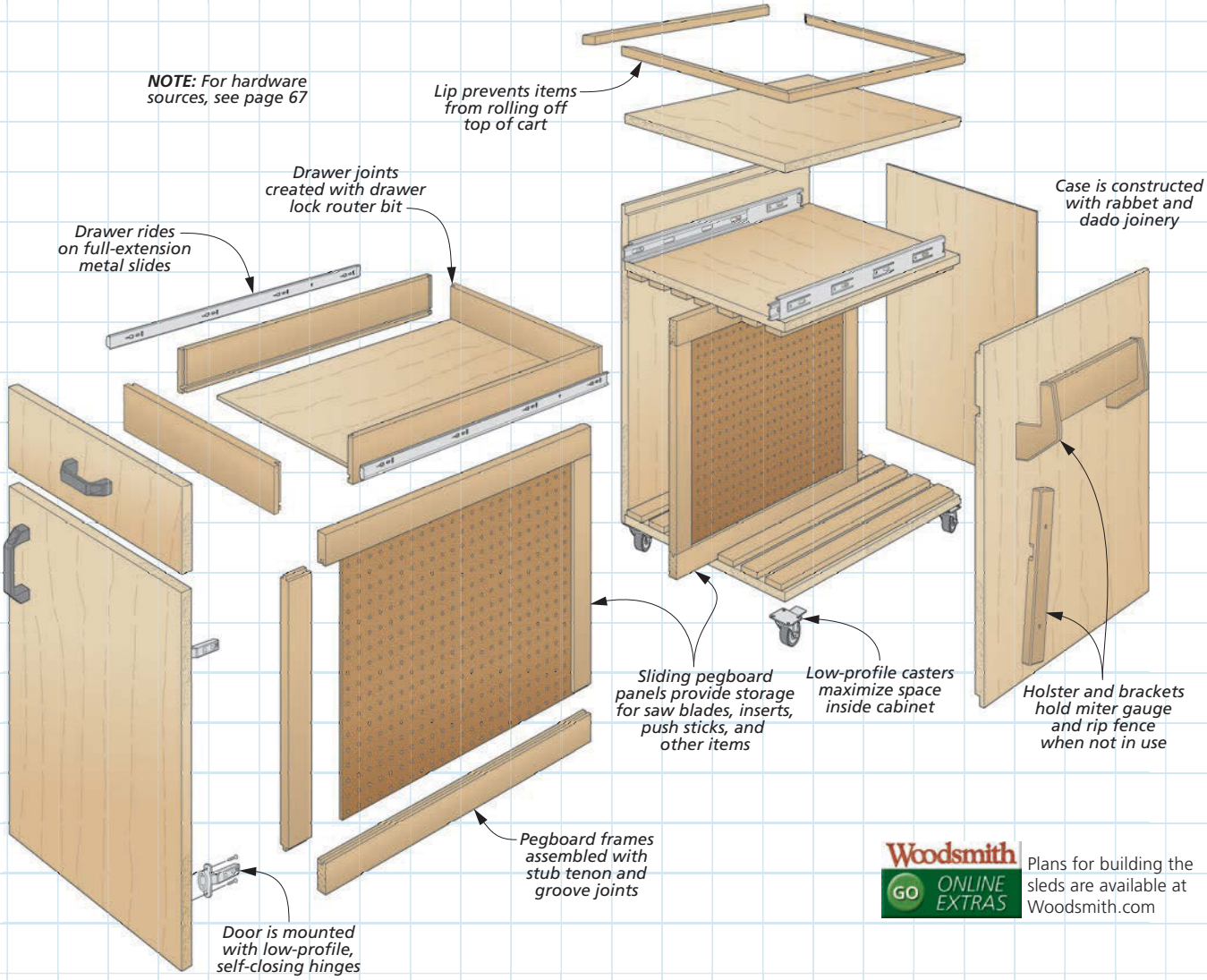

Woodsmith GO ONLINE EXTRAS Plans for building the sleds are available at Woodsmith.com

▲ Sleds for crosscuts and miters make cutting boards and small panels to length or cutting miters a snap. Both sleds fit inside the cart for storage. (Miter sled not shown.)

▲ Pegboard panels slide out for easy access to stored items. Objects that can't be stored on hooks can go in the drawer above.

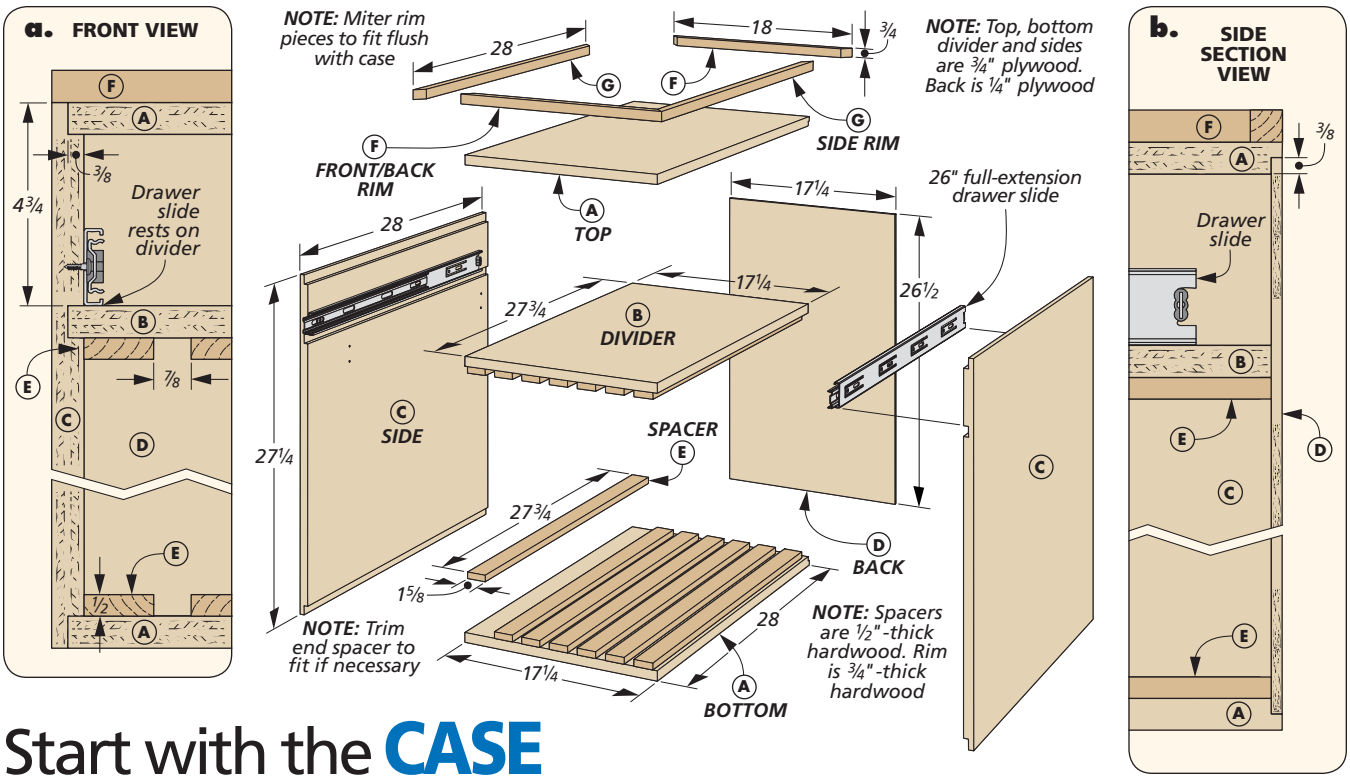

Start with the CASE

At its core, this storage cart is little more than a basic plywood box, open at the front and with a divider to create a drawer opening. There are a few nuances to point out along the way, but otherwise, the case is pretty standard fare, as shown in the drawing above.

The top, bottom, and divider are all held in dadoes and rabbets in the case sides. You can see how these are made in Figures 1 and 2 below. The back is held in a rabbet along the inside back edge of the top, bottom and side panels, which is detailed in Figure 3.

To make installing the drawer slides easier, I attached one half of each slide to the side panels before assembling the case. You can line these up flush with the dado for the divider, as shown in detail 'a' above. When that's done, glue up the sides, top, bottom, and divider, checking for square. (Leave the back off for now.)

SPACERS. Later, you'll make a set of pegboard storage panels that will slide into the lower section of the case. But to create the grooves for these panels, you'll need to add two rows of spacers to the case. These are nothing more than narrow strips of hardwood, glued to the underside of the divider panel and the top face of the bottom panel. The key here is to maintain a 7/8" wide gap between the spacers. (Note that depending on the actual opening size of your cabinet, you may have to slightly trim the last spacer to fit.)

How-To: CUT THE CASE JOINERY

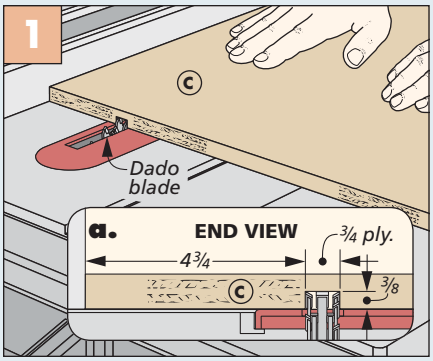

Dadoes for Divider. To cut the dado for the divider, shim your dado blade to match the thickness of the plywood.

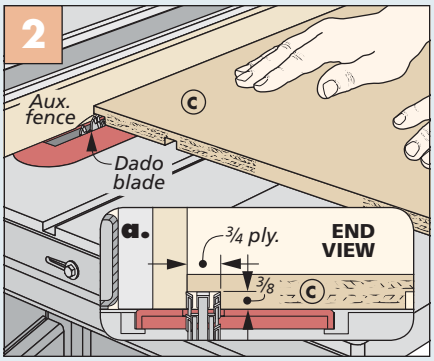

Rabbets for Top & Bottom. Using an auxiliary rip fence, cut the rabbets for the top and bottom.

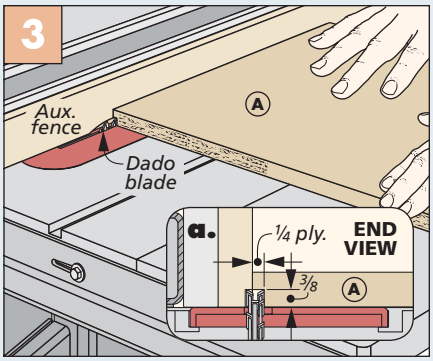

Rabbet for Case Back. A narrower rabbet is cut along the back edge of the top, bottom and sides for the case back.

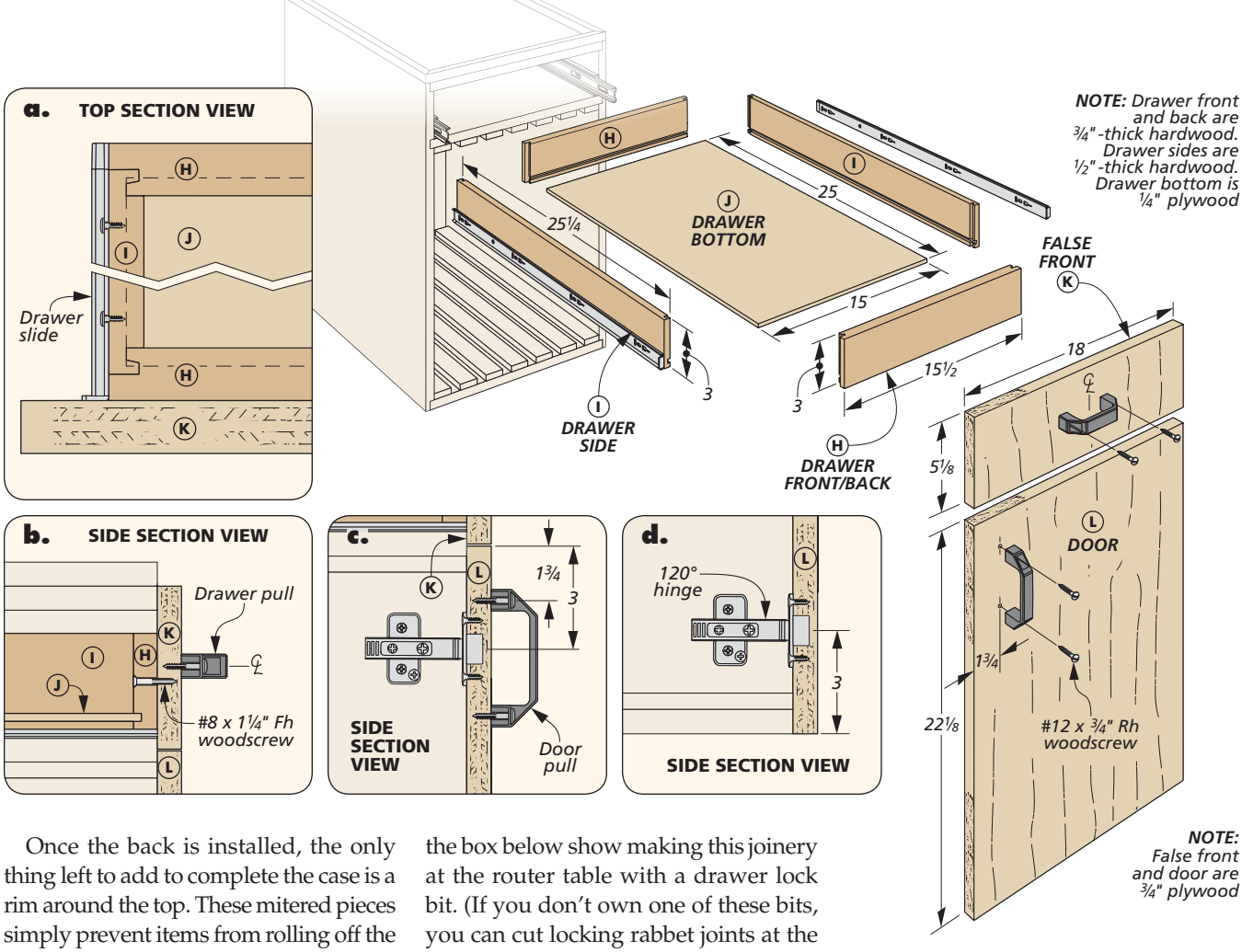

Once the back is installed, the only thing left to add to complete the case is a rim around the top. These mitered pieces simply prevent items from rolling off the top of the cart when in use.

ADDING THE DRAWER & DOOR

Like the case, the drawer and door of the storage cart are pretty straightforward, as you can see in the drawing above. The drawer case is constructed with locking rabbets. Figures 1 and 2 in the box below show making this joinery at the router table with a drawer lock bit. (If you don't own one of these bits, you can cut locking rabbet joints at the table saw, using a dado blade.)

The drawer bottom is held in a groove cut in the inside face of the four drawer pieces (Figure 3). After assembling the drawer case and mounting it to the slides, you can add the plywood false front. One thing to note here is the grain direction. The grain runs vertically to match the grain direction of the door which will be added next.

DOOR. The door couldn't be much simpler. It's just a piece of plywood mounted to the case with Euro-style hinges (details 'c' and 'd'). The last step is to add pulls to the drawer and door.

How-To: MAKE THE DRAWER JOINERY

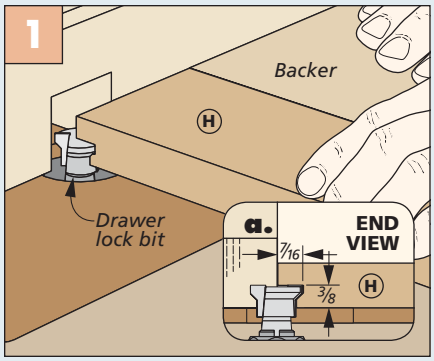

Drawer Front & Back. A drawer lock bit is used to create a tongue on the ends of the drawer front and back.

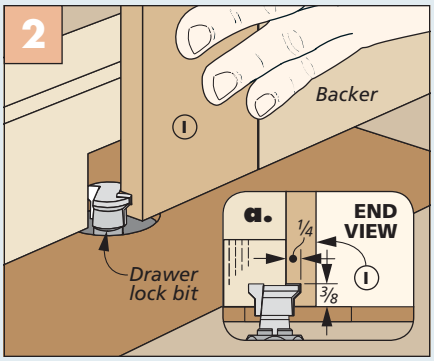

Drawer Sides. Without changing the bit height, reposition the fence to rout the mating tongues in the drawer sides.

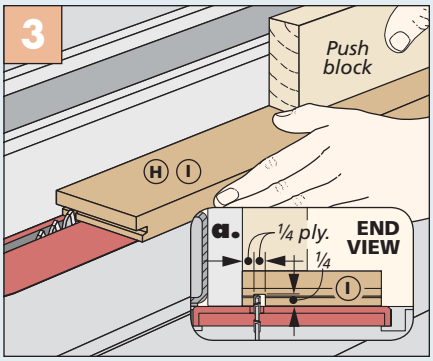

Groove for Drawer Bottom. A groove cut in the four drawer pieces is sized to hold a plywood drawer bottom.

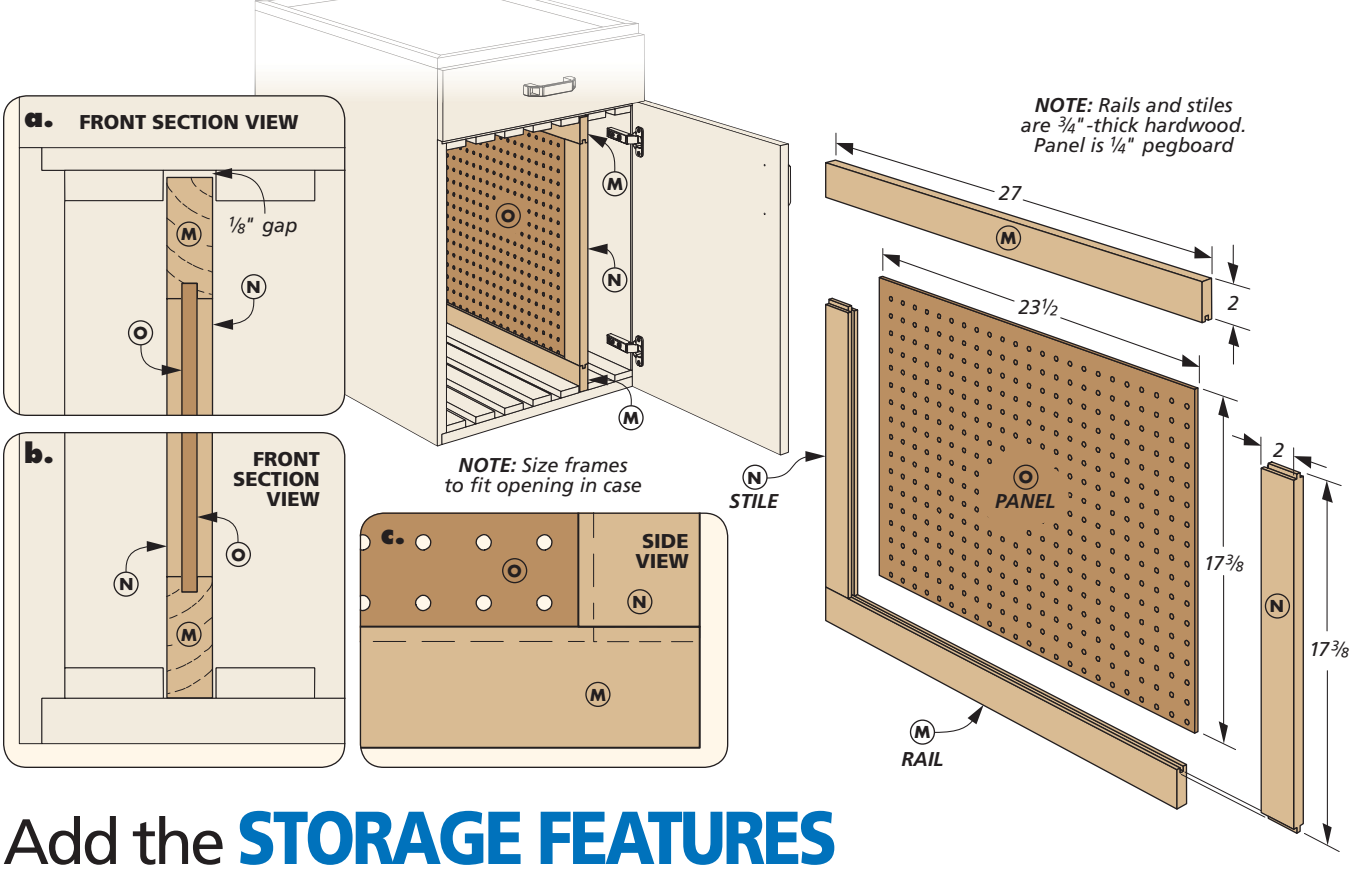

Add the STORAGE FEATURES

With the basic cart completed, there are just a few add-ons left to take care of. To begin with, I made a pair of sliding pegboard panels. As shown in the drawing above, these consist of a pegboard panel held in a hardwood frame. The cart has slots to hold up to six panels. But if you're building the optional sleds, you'll want to leave at least a couple of open slots to hold the sleds.

The rails and stiles of the frames are grooved to hold the pegboard, as shown in Figure 1 in the box below. Then you can cut stub tenons on the ends of the stiles to fit in the grooves in the rails (Figure 2). After cutting the pegboard panels to size, you can glue up the frame assemblies. The panels should slide in the slots freely. If they don't you may need to trim them to size slightly.

BRACKET & HOLSTER

One of the convenient features of this cart is that it includes onboard storage for your rip fence and miter gauge so that you have a place to keep each one when they're not in use. You can see how this works in the photo on page 24 and the drawing at the top of the next page.

The rip fence is held by a pair of brackets that are screwed to the side of the cart. I sized my brackets to accommodate the rip fence of my saw (detail 'a' on next page). You may need to modify the size and opening of the brackets to fit your own rip fence. After laying out

How-To: CUT THE SLIDING PANEL FRAMES & STORAGE BRACKETS

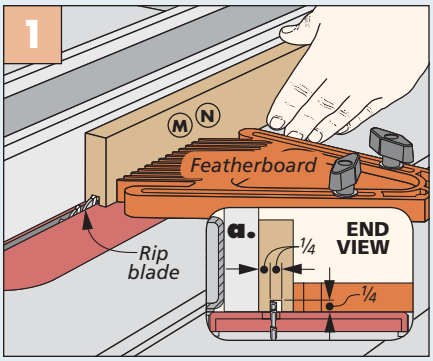

Panel Grooves. To center the groove in the rails and stiles for the panel, flip the workpiece between passes.

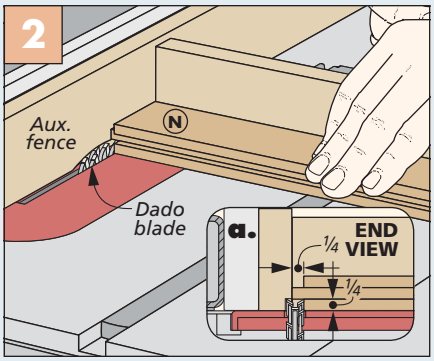

Stub Tenons. Stub tenons cut on the end of the stiles should be sized to fit the grooves in the rails.

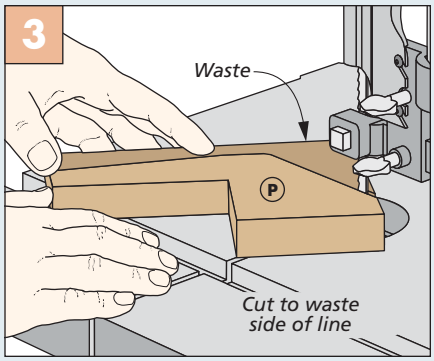

Fence Brackets. After laying out the profile for the fence brackets, cut the parts to shape at the band saw.

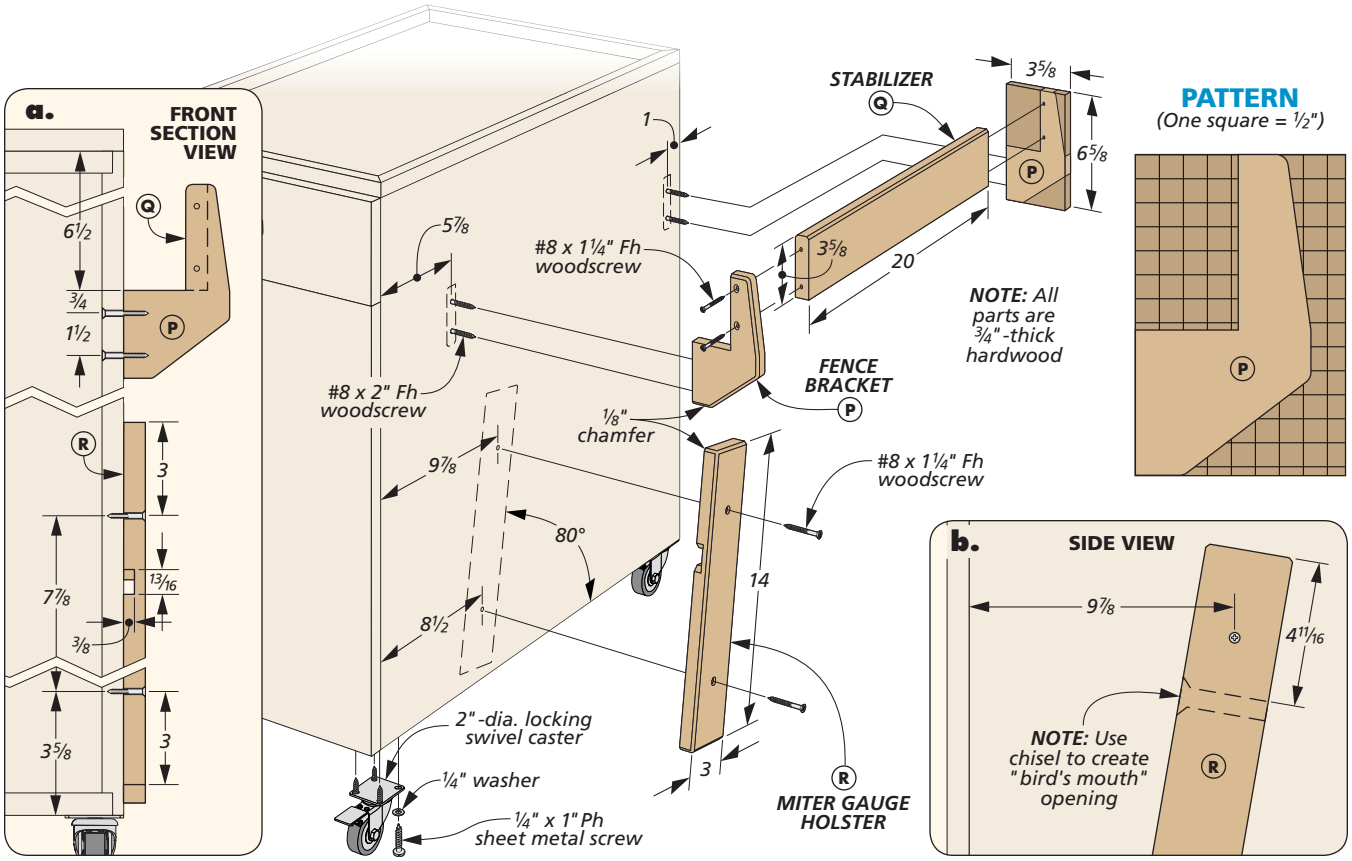

the profile of the brackets, I cut them to shape at the band saw, as you can see in Figure 3 on the previous page.

The brackets are tied together with a stabilizer. Again, you may have to alter the length and width of this piece to accommodate your rip fence. The brackets are just screwed to the ends of the stablilzer. Then the assembly is mounted to the side of the cart with screws.

MITER GAUGE HOLSTER. To hold the miter gauge, I added a holster. It's nothing more than a piece of hardwood with a dado cut in it that's sized to match the bar on your miter gauge. After cutting the dado, I used a chisel to chamfer the corners of the opening at one end, creating a bird's mouth (detail 'b' above). This makes it easier to slide the miter gauge into place.

The holster is simply screwed to the side of the cart. But to make it a little easier to reach for the miter gauge, I installed the holster on an angle, as you can see in detail 'b' above.

CASTERS. After applying a finish to the cart, the last step is to install a set of casters. Then you can start loading it up with all the stuff that used to take up residence on top of your saw. W

Materials, Supplies & Cutting Diagram

A	Top/Bottom (2)	¾ ply. - 17¼ x 28	**I**	Drawer Sides (2)	½ x 3 - 25¼	**Q**	Stabilizer (1)	¾ x 3⅝ - 20
B	Divider (1)	¾ ply. - 17¼ x 27¾	**J**	Dwr. Bottom (1)	¼ ply. - 15 x 25	**R**	Miter Gauge Holster (1)	¾ x 3 - 14
C	Sides (2)	¾ ply. - 28 x 27¼	**K**	False Front (1)	¾ ply. - 18 x 5⅛			
D	Back (1)	¼ ply. - 17¼ x 26½	**L**	Door (1)	¾ ply. - 18 x 22⅛			
E	Spacers (14)	½ x 1⅝ - 27¾	**M**	Panel Rails (4)	¾ x 2 - 27			
F	Front/Back Rims (2)	¾ x ¾ - 18	**N**	Panel Stiles (4)	¾ x 2 - 17⅜			
G	Side Rims (2)	¾ x ¾ - 28	**O**	Panels (2)	¼ pgbd. - 17⅜ x 23½			
H	Dwr. Front/Back (2)	¾ x 3 - 15½	**P**	Fence Brackets (2)	¾ x 3⅝ - 6⅝			

- (8) #8 x 1¼" Fh Woodscrews
- (4) #8 x 2" Fh Woodscrews
- (4) 2"-dia. Locking Swivel Casters
- (16) #14 x 1" Ph Sheet Metal Screws
- (1 pr.) 26" Full-Extension Slides w/Screws
- (2) Nylon Pull Handles
- (4) #12 x ¾" Rh Woodscrews
- (1 pr.) 120° Full-Overlay Hinges w/Screws

½"x 7" - 84" Hard Maple (Two boards @ 4.1 Sq. Ft. each)

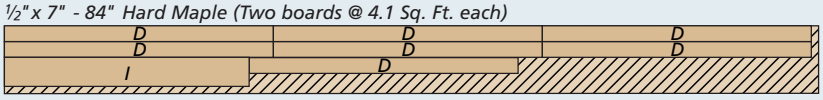

¾"x 4" - 84" Hard Maple (2.3 Bd. Ft.)

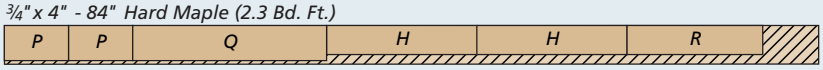

¾"x 5½" - 96" Hard Maple (3.7 Bd. Ft.)

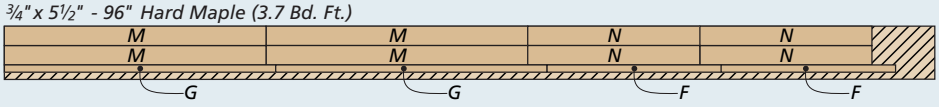

ALSO NEEDED:
One 48" x 96" sheet of ¾" maple plywood
One 24" x 48" sheet of ¼" maple plywood
One 48" x 48" sheet of ¼" pegboard

Gift Project

miterless Picture Frames

Surprising things come in small packages. These frames are the perfect example of a nice woodworking exercise and gift ideas rolled into one.

It's seems that hectic schedules are par for the course these days. And one of the areas that's usually the first to suffer is the time you get to spend in the shop. I'm okay with all the activity in life, but I've set a simple goal of having some quality shop time and turning out modestly sized projects that will make great gifts. With that in mind, these stylish picture frames give you a great return on your investment.

To start, you can build all of these frames without spending much cash. Frankly, you probably have all the material you need sitting in the scrap bin. All of the frames utilize simple joinery. Wood dowels are employed for one of the frames. The other two are held together with biscuits. Either method adds to the solid simplicity of these frames. It's great not having to fuss with gaps and alignment problems that come with mitered corners. (I think using dowels and biscuits make for stronger joinery in this setting.)

As the photo above shows, there are plenty of design options. The three varieties include one with an Asian flair, a Craftsman profile, and another with a modern vibe. All of these are designed to hold a 5x7 photograph. You can find details online at *Woodsmith.com* for making each of the frames in an 8x10 size, as well.

Materials & Supplies

A	Stiles (2)	5/8 x 3/4 - 9 3/4	• (1) 1/4" dia. Dowel
B	Rails (2)	5/8 x 3/4 - 4 1/2	• (1) 1/8" - Glass 5" x 7"
C	Backer (1)	1/8 hdbd. - 5 x 7	• (4) 7/8" Turnbuttons w/Screws

ASIAN FRAME

I chose to kick off the process by making the frame you see in the drawing to the right. I used padauk for this frame, since it works well with the Asian-inspired theme. The overhanging rails are supported by narrow stiles. Both parts sport a gentle curve on their outer edges that's simple to create, yet adds an influence that isn't overbearing. A few short dowels are used between the stiles and rails to tie them together. A pair of longer dowels are glued into the outer ends of the lower rail to let the frame stand on its own.

DOWEL DYNAMICS. After cutting the stiles and rails to size and mitering the ends of the rails, you can drill the holes for the dowels. The easiest way to approach this is to drill the holes in the stiles first as shown in Figure 1. As for the rails, lay out the dowel locations as you see in detail 'a' and 'd.' I used inexpensive dowel centers in the stiles to pinpoint the center location for the dowel holes in the rails. (Remember to mark for the support dowels on the bottom rail too.) Drilling the holes in the rails is shown in Figure 2.

SOFTEN THE PROFILE. You'll notice that the stiles and rails all have a slight curve on their outer edges. The stile curve is so gentle I made it with a sanding drum on my drill press. As for the rail curve, I rough cut this at the band saw, then cleaned it up with the sanding drum as well. I also eased all of the edges of the rails and stiles to be consistent with the design theme.

At this point, you're ready to glue up the frame. Check the frame for square as you do this. When the glue is dry, you can rout the rabbet in the back of the frame, as shown in Figure 3. This makes the space for the glass, photo, and backer. All that's left is to install the turnbuttons that hold the contents in place.

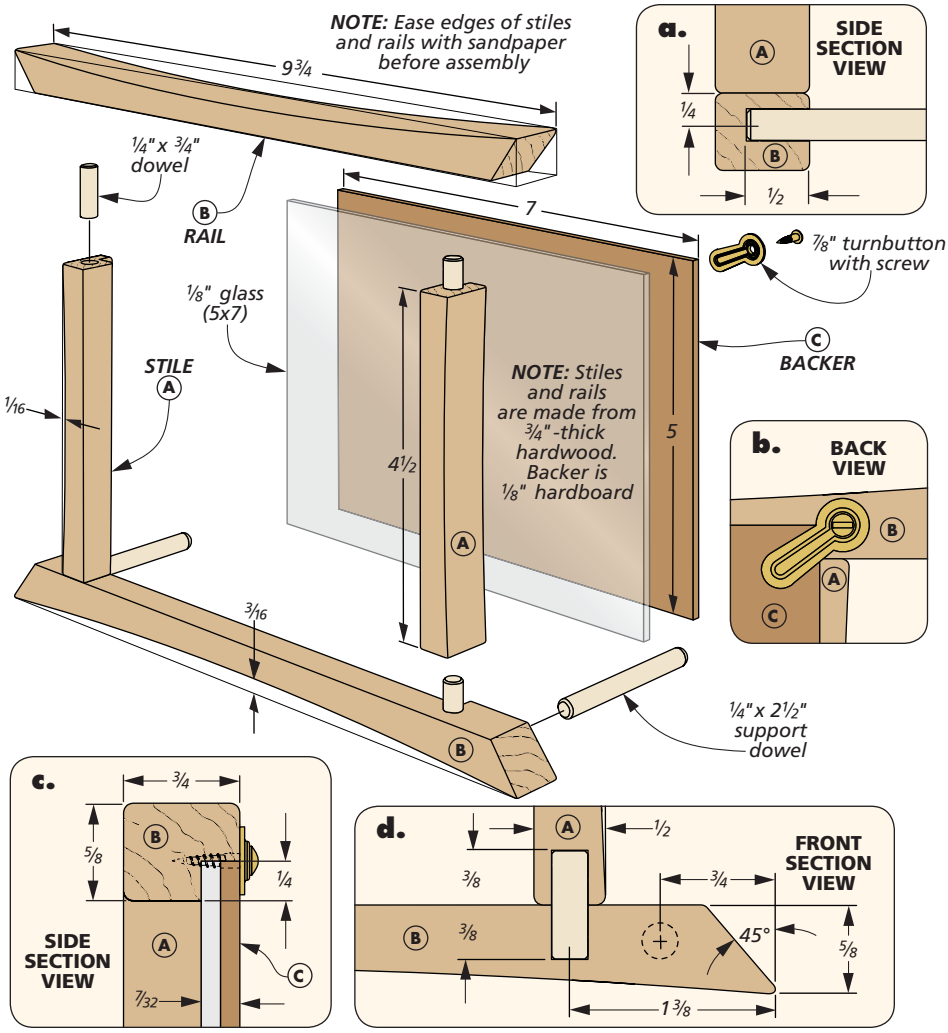

How-To: INSTALL DOWELS & CREATE RABBET

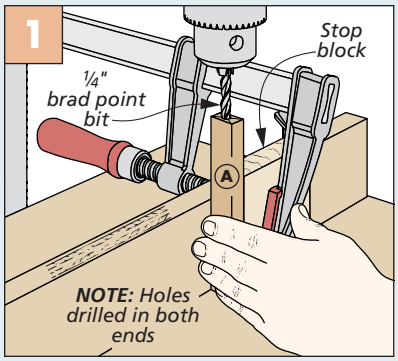

Drill Stiles. A stop block lets you center the hole in the stile. Also, it holds the stile square to the drill bit.

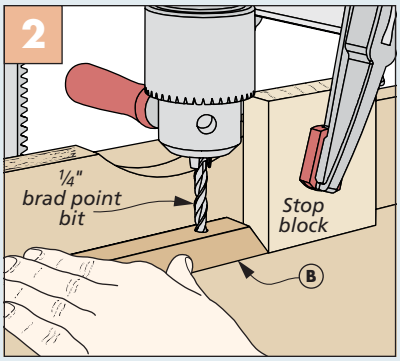

Drill Rails. First, drill the dowel holes for the stiles. Then drill the holes in the lower rail for the support dowels.

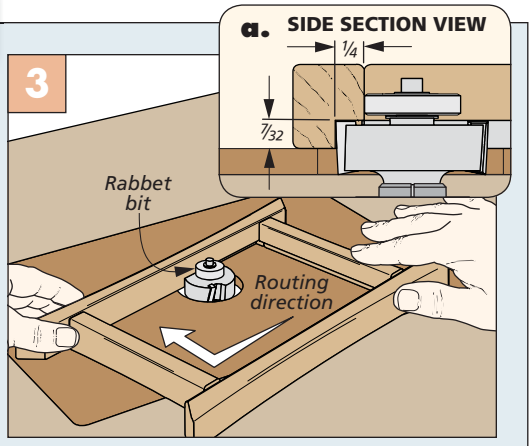

Make Rabbet. Use a rabbeting bit in a router table to make the recess for the glass, picture and backer. Square the corners with a chisel.

Creating the CRAFTSMAN FRAME

The Craftsman-style frame sports a simple yet appealing look that is one of the hallmarks of the style. You'll immediately notice this in the stiles and rails shown in the drawing to the right. Both pieces are quarter-sawn oak that are the same width, but the rails are 1/8" thinner. The thinner rail emphasizes the cutout that accents the stiles. Also, you'll see that this frame (and the next) are joined with biscuits.

BISCUIT BASICS. With the four pieces cut to size, I positioned them face down on the bench and marked the layout lines for the biscuit joiner. As you can see in detail 'b', it's best to shim the rails so they're even with the back of the stiles. You'll cut the slots with the frame pieces face down as well.

STILE CUTOUTS. Making the decorative cutouts in the stiles starts with drilling the end holes, as shown in Figure 1 below. After you've drilled these holes, you'll move over to the router table to complete the cutout. You want the groove that connects the circles to be perfectly centered. To confirm this, I made some test cuts in a scrap piece the same width as the stiles. When you're comfortable with the setting, make the groove with a series of shallow passes (Figure 2). Then you can glue the stiles and rails together. I glued the biscuits into the stiles first. Then glued the frame together making sure the back was flush. (Also, make sure the rails stay flush with the ends of the stiles.)

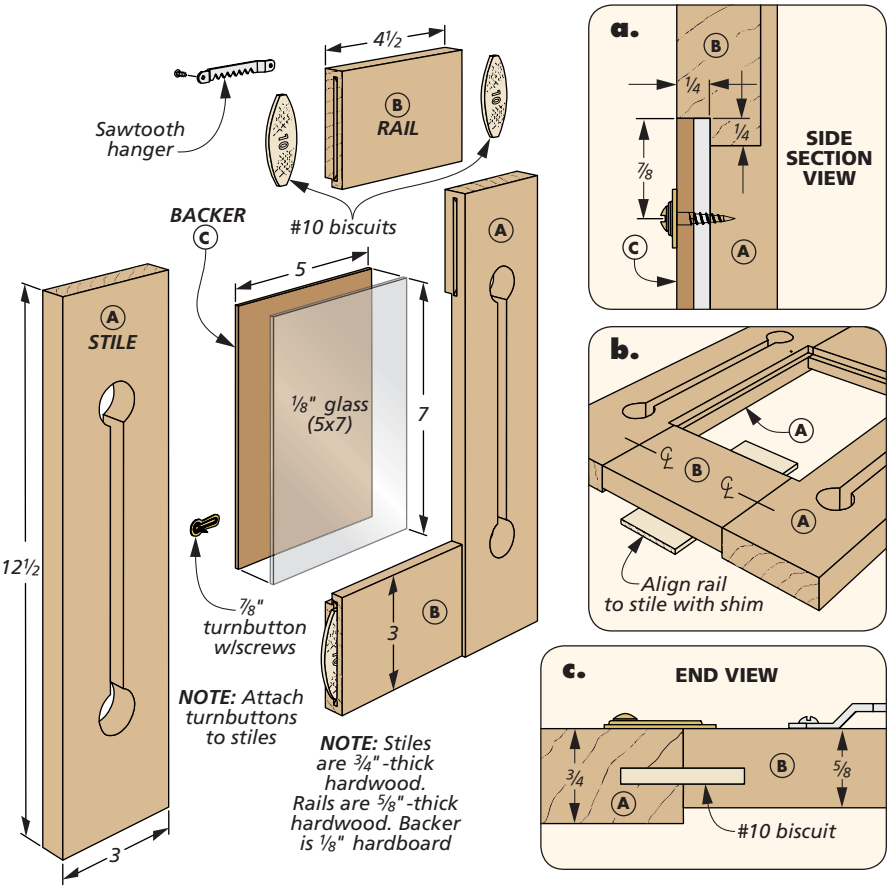

RABBET FOR FRAME. Forming the rabbet in the back of the frame that holds the glass, picture, and backer is up next. If you take a moment and look back on page 31, Figure 3 shows you how to do this. When you're done cutting it at the router table, you can square up the corners with a chisel.

The finish goes on next. The oak doesn't need much to enhance it. All I did was rub on three coats of oil-based finish with a rag, letting each coat dry before the next. That leaves you with installing the turnbuttons. I installed two of them on each of the stiles. To complete the frame, I screwed a sawtooth hanger on the center of the upper rail.

How-To: MAKE THE CUTOUTS

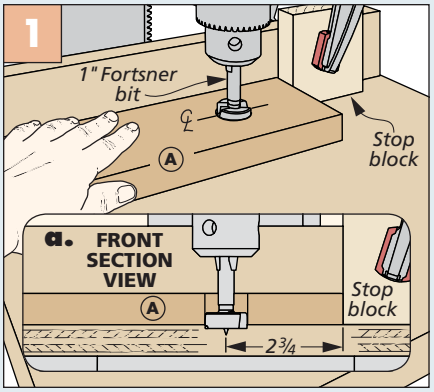

End Holes in Stiles. Use a stop block clamped to the drill press fence to locate the end holes in the stile.

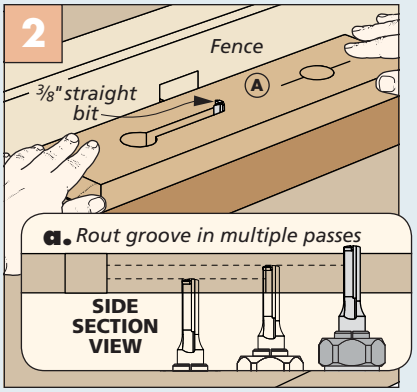

Rout Groove. Center the bit on the stile and make shallow passes to avoid burning the workpiece.

Materials & Supplies

A	Stiles (2)	3/4 x 3 - 12 1/2
B	Rails (2)	5/8 x 3 - 4 1/2
C	Backer (1)	1/8 hdbd. - 5 x 7

- (1) 1/8" - Glass 5" x 7"
- (4) 7/8" Turnbuttons w/Screws
- (4) #10 Biscuits
- (1) Sawtooth Hanger w/Screws

Making the MODERN FRAME

The third frame in the lineup has similarities to the Craftsman frame in that it's joined with biscuits. But in style, this cherry and maple frame goes in a different direction than either of the previous two frames. As the main drawing shows, the cherry stiles and rails form a pinwheel pattern as opposed to one set trapping the other. Highlighting this detail is the inlay that's rabbeted into the inner edge of all the pieces. The maple inlay strips are stained darker than the frame and stands proud of the surface as well.

ASSEMBLE THE FRAME. After sizing the pieces and cutting the biscuit slots, you'll turn your attention to cutting a rabbet to hold the inlay pieces, Figure 1 below shows this. Before cutting the inlay pieces to size, glue up the frame and put it aside to dry.

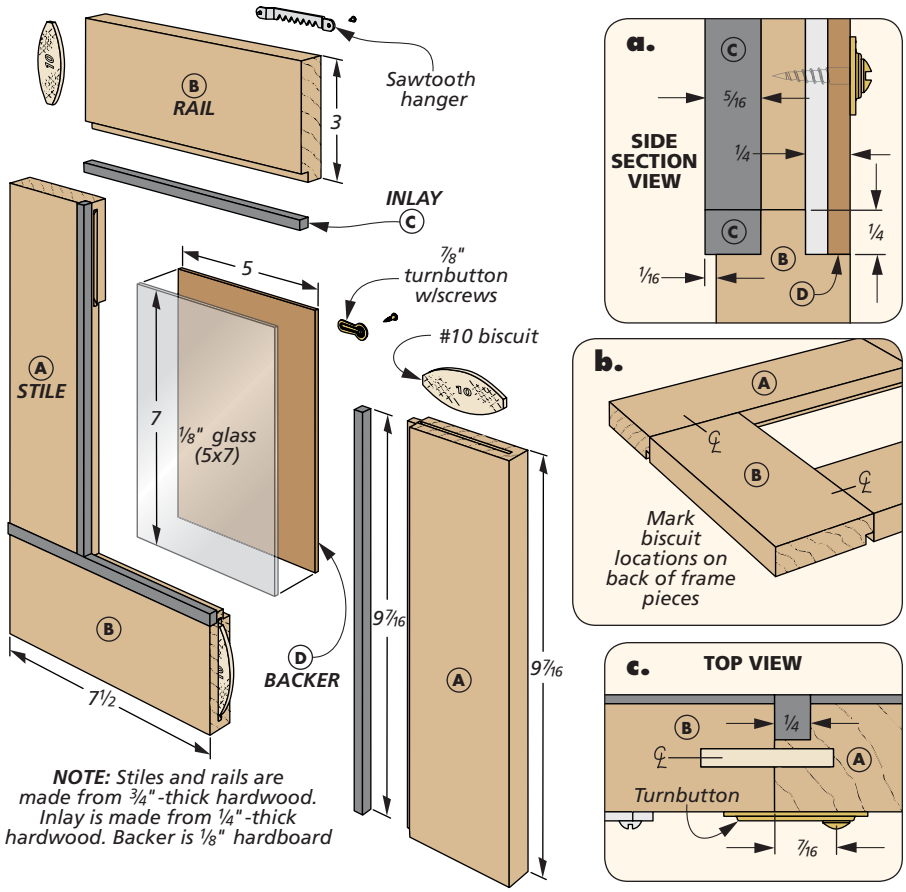

MAKE THE INLAY. While waiting for the frame to dry, I took some time to make the inlay strips. I chose to plane a piece of maple to 5/16" thick. Then I cut them roughly to width at the band saw and cleaned them up with a hand plane. When you've unclamped the frame, you want to dry fit the inlay pieces. I carefully fit each inlay piece. (The goal is for each to fit against its neighboring inlay, and flush with the outside edge of the frame.) As I did this, I noted where each piece fit.

FINAL DETAILS. After all the pieces are fit, I colored them with an ebony dye and let them dry thoroughly before gluing them in place (Figure 2). It's not going to take much glue to hold the strips, so go easy when spreading it on. I used a wet rag wrapped around the edge of a putty knife to wipe off any excess.

Rabbeting the back and cleaning up the corners before installing the hardware is the last order of business. Then you can pick the photos that go in the frames. Or you can turn that job over to the receiver of the frames, and start planning your next project. W

How-To: FIT THE INLAY

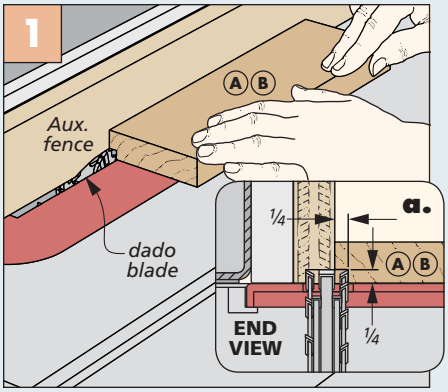

Rabbet for Inlay. To hold the inlay strips, the stiles and rails are rabbeted with a dado blade at the table saw.

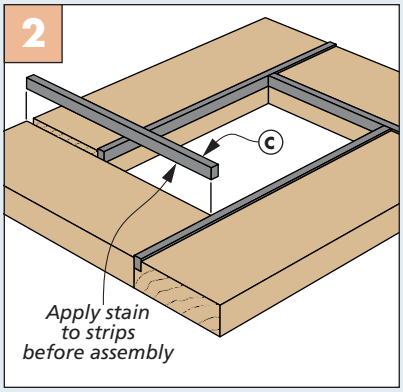

Install Inlay. Dry fit and stain the inlay strips before gluing them into the frame one at a time.

Materials & Supplies

A	Stiles (2)	3/4 x 3 - 12 1/2
B	Rails (2)	3/4 x 3 - 4 1/2
C	Inlay	1/4 x 5/16 - 36 rgh.
D	Backer (1)	1/8 hdbd. - 5 x 7

- (1) 1/8"- Glass 5" x 7"
- (4) 7/8" Turnbuttons w/Screws
- (4) #10 Biscuits
- (1) Sawtooth Hanger w/Screws

Woodsmith GO ONLINE EXTRAS

8x10 versions of all of the frames are available at Woodsmith.com

multipurpose Auxiliary Vise

Raise your work to a new level. Made with traditional details and materials, this handy vise is a rugged companion to your workbench.

A heavy-duty workbench sits at the center of most workshops. Equipped with stout face and end vises, it's ready to tackle just about any kind of task you can throw at it. Part of what makes it so capable is that it serves as a platform for accessories. These can range from bench hooks and shooting boards to hold-downs and assembly jigs. Another add-on is shown here — an auxiliary vise.

A small vise like this may seem redundant, considering the large vises already on a workbench. However, this vise offers some great benefits. First, the vise raises a workpiece to a more comfortable level, whether you're sitting or standing.

Second, the smaller jaws offer greater access to a workpiece and are less likely to interfere with a tool. In addition, you can easily adjust the position of the vise without needing to release the workpiece. The vise rotates as well as extends beyond the edge of the bench. It's anchored by a mounting bolt that fits into a bench dog hole so you can approach a workpiece from any angle.

I modeled this vise after an old English carving vise. But its use isn't limited to carving. To enhance its classic look, it's made from European beech.

In the course of building one for yourself, you'll learn how to cut large dovetails, shape thick stock, and create custom hardware like the side plates, hub and handle. The result is a versatile tool you'll enjoy using day after day.

Construction Overview / OVERALL DIMENSIONS: 6"W x 9"H x 22¼"D

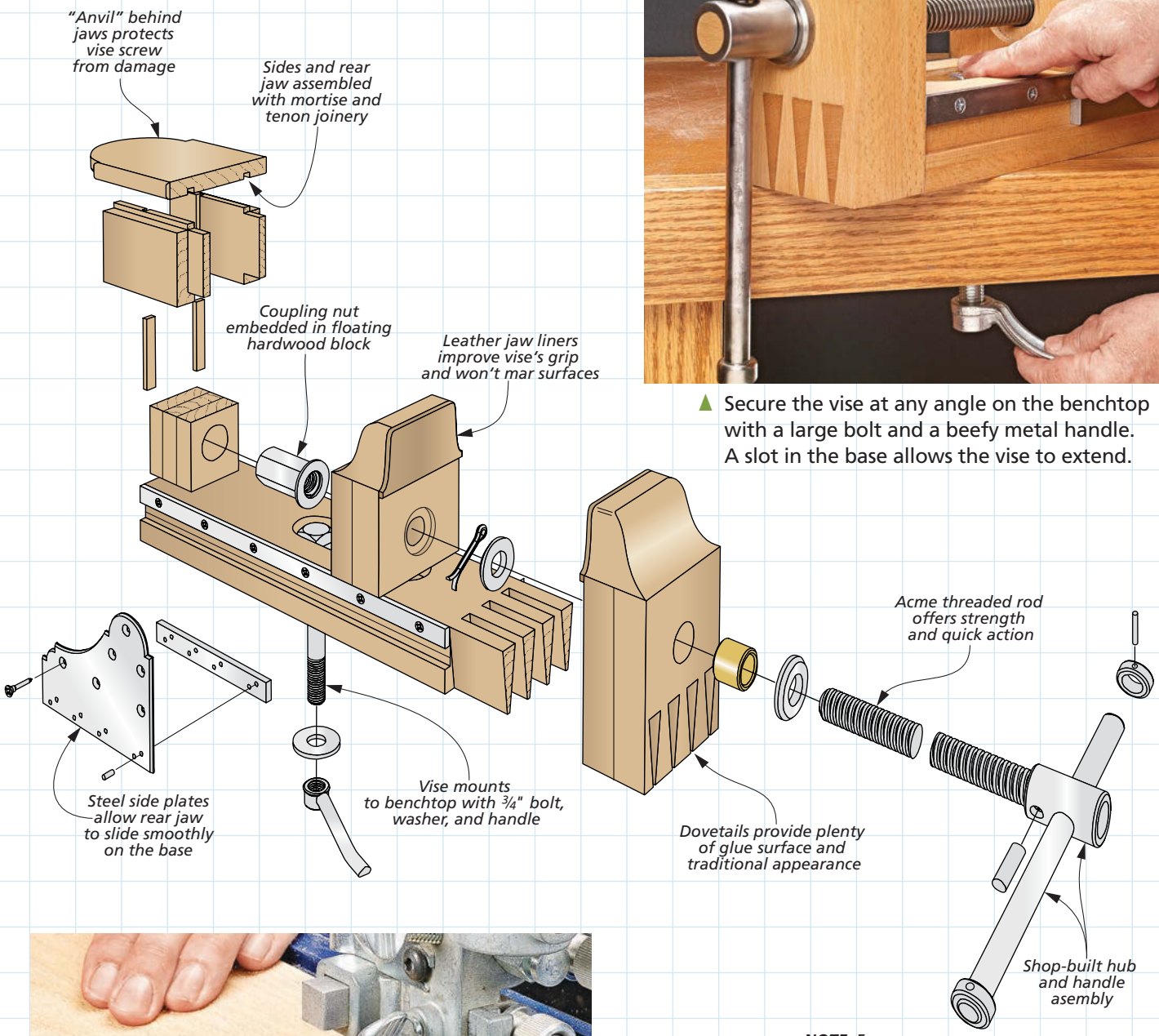

▲ Secure the vise at any angle on the benchtop with a large bolt and a beefy metal handle. A slot in the base allows the vise to extend.

NOTE: For hardware sources, turn to page 67

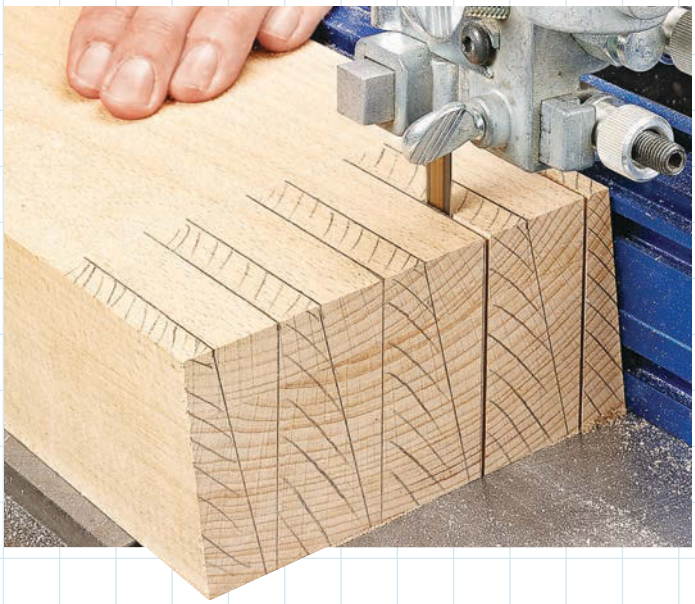

◄ The dovetails that join the front jaw to the base are cut at the band saw. For step-by-step instructions, turn to page 52.

Woodsmith GO ONLINE EXTRAS Patterns for shaping the jaws are available at Woodsmith.com

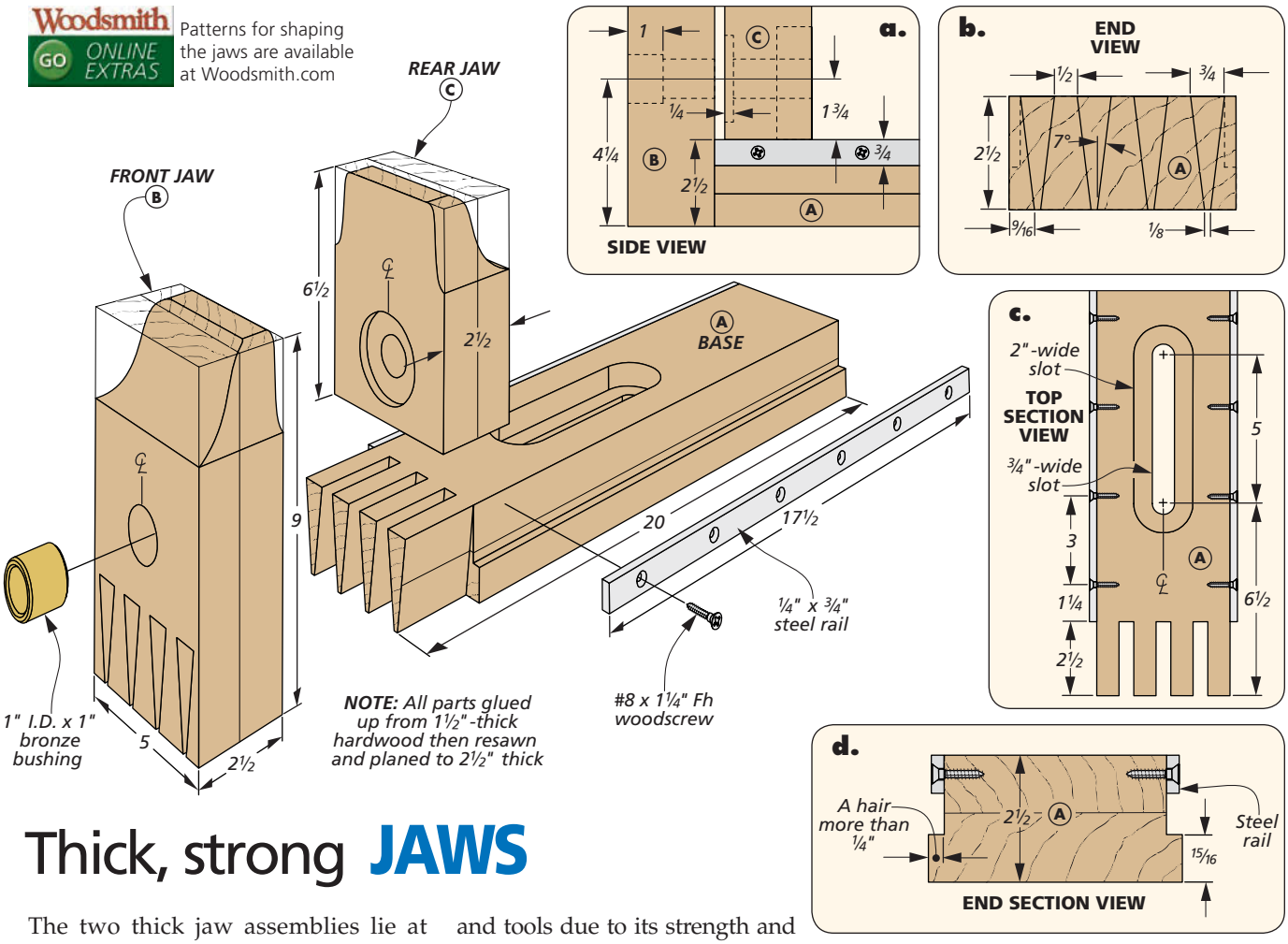

Thick, strong **JAWS**

The two thick jaw assemblies lie at the heart of the vise and that's where I started the construction. I glued up blanks for the base, front, and rear jaws and planed them to the final thickness. As I mentioned earlier, I used beech. It's a traditional choice for workbenches and tools due to its strength and durability. Whether you're using power tools or hand tools, the smooth, even grain of beech is a pleasure to work with. (Hard maple is a good substitute.)

BASE. The front jaw and base are joined together with dovetails, as shown in the drawing above. I laid out the pins on the base first to account for a rabbet along each edge, as in detail 'b' and Figure 1 below. I turned to the band saw to cut the dovetails. You can find the

How-To: CUT DOVETAILS & RABBETS

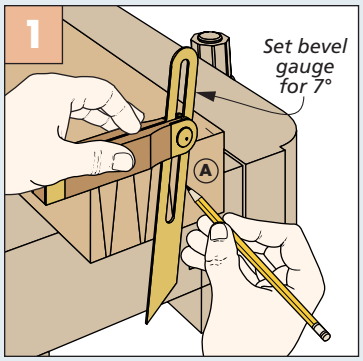

Pins First. Lay out the pins on the base. To cut the pins at the band saw, turn to page 52.

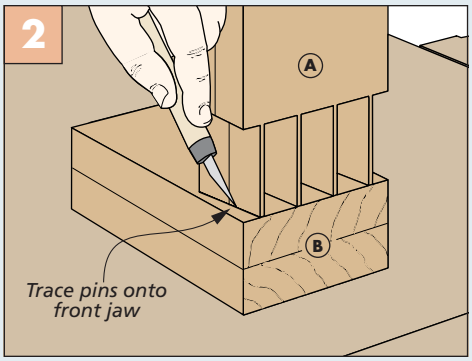

Transfer for Tails. Use the pins as a guide to lay out the tails on the mating front jaw. A jig on page 54 makes these cuts simple.

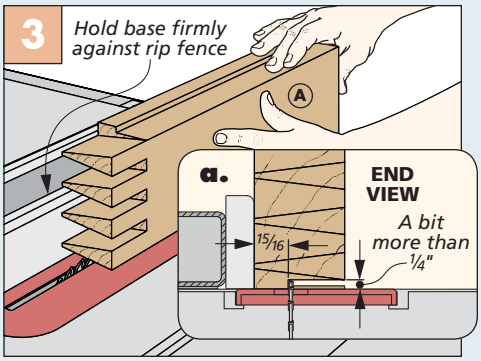

Two-Pass Rabbets. For a smooth result, cut the rabbet on the base in two passes with a regular blade.

process on page 52. The pins determine the locations of the tails formed on the front jaw, as shown in Figure 2.

A PAIR OF RABBETS. At this point, you need to cut a rabbet along each edge of the base (Figure 3). The rabbets, along with a pair of steel rails, form a channel that the rear jaw assembly slides in. Size the rabbets to be a hair deeper than the thickness of the steel rails.

Cut the rails from steel bar stock and drill and countersink mounting holes at the drill press. The mild steel is pretty easy to work with. Attach the rails so they are flush with the upper surface of the base, as shown in details 'a' and 'd' on the previous page.

SLOT WORK. The vise attaches to a workbench with a bolt that passes through a dog hole. A slot in the base houses the bolt head and washer. This slot allows you to adjust the position of the vise. Creating the slot involves a couple of drilling steps (Figures 1 and 2 at right) along with some chisel work.

THE JAWS. With the base complete, you can focus on the remaining steps to complete the front and rear jaws. The jaws have counterbored holes to accept the vise screw hardware (Figures 3 and 5). Take care to drill the counterbores on the correct faces, as you can see in details 'a' and 'b' on the previous page.

The counterbore in the front jaw accepts a bronze bushing (main drawing on the previous page). The counterbore in the rear jaw is sized to hold a washer.

The top of each jaw is shaped into flowing curves that create a slimmer profile to allow you to gain better access to a workpiece clamped in the vise. Download and print a set of paper patterns to guide the cutting at the band saw, as illustrated in Figure 4. Once the curves are smoothed, you can glue the base and front jaw together, being sure to keep the assembly square as the glue dries.

SLOT MORTISES. The final detail to take care of in the rear jaw is to create a pair of mortises. These accept tenons on the vise sides that you'll create shortly. As you can see in Figure 6, I created the mortises using a straight bit in the router table. Make each mortise in several light passes. Then grab a chisel to square up the ends of the mortises.

How-To: CREATE BASE & JAW DETAILS

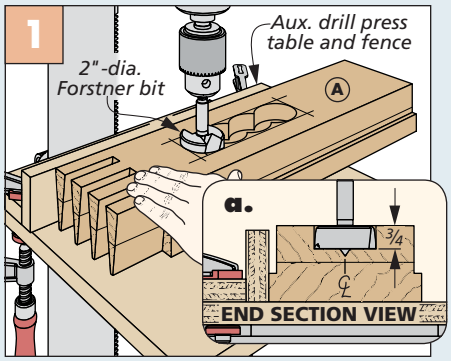

Stepped Slot. Drill out the wide part of the slot with a large Forstner bit. Clean up the sides with a chisel.

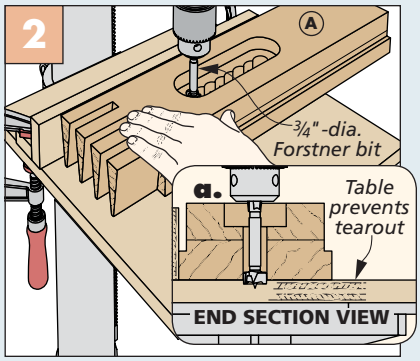

Narrow Portion. A smaller-diameter bit clears away the waste for the lower section of the slot.

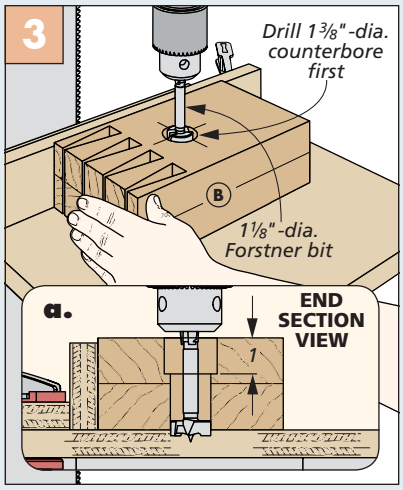

Counterbored Hole. Use the dimple left by the larger bit to align the through hole in the front jaw.

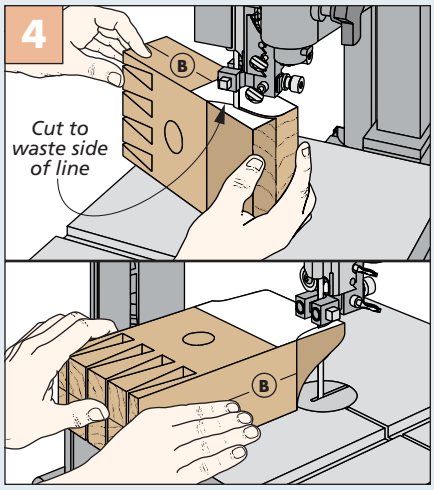

Cut to Shape. A pair of patterns simplifies the task of cutting the jaw to shape. A little sanding finishes the job.

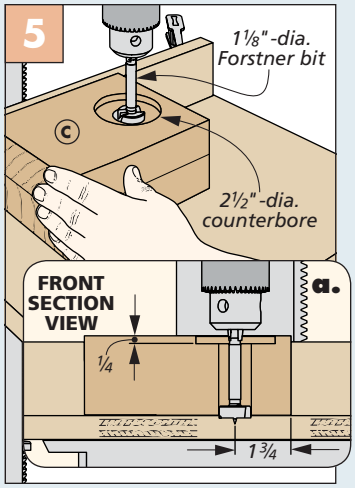

Rear Jaw. The rear jaw has a counterbored hole as well to allow the jaws to close tightly.

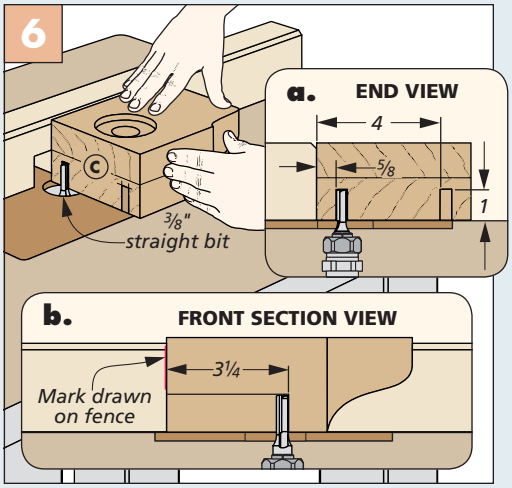

Routed Mortises. For a deep mortise like this, make several light passes increasing the height of the bit slightly between each cut.

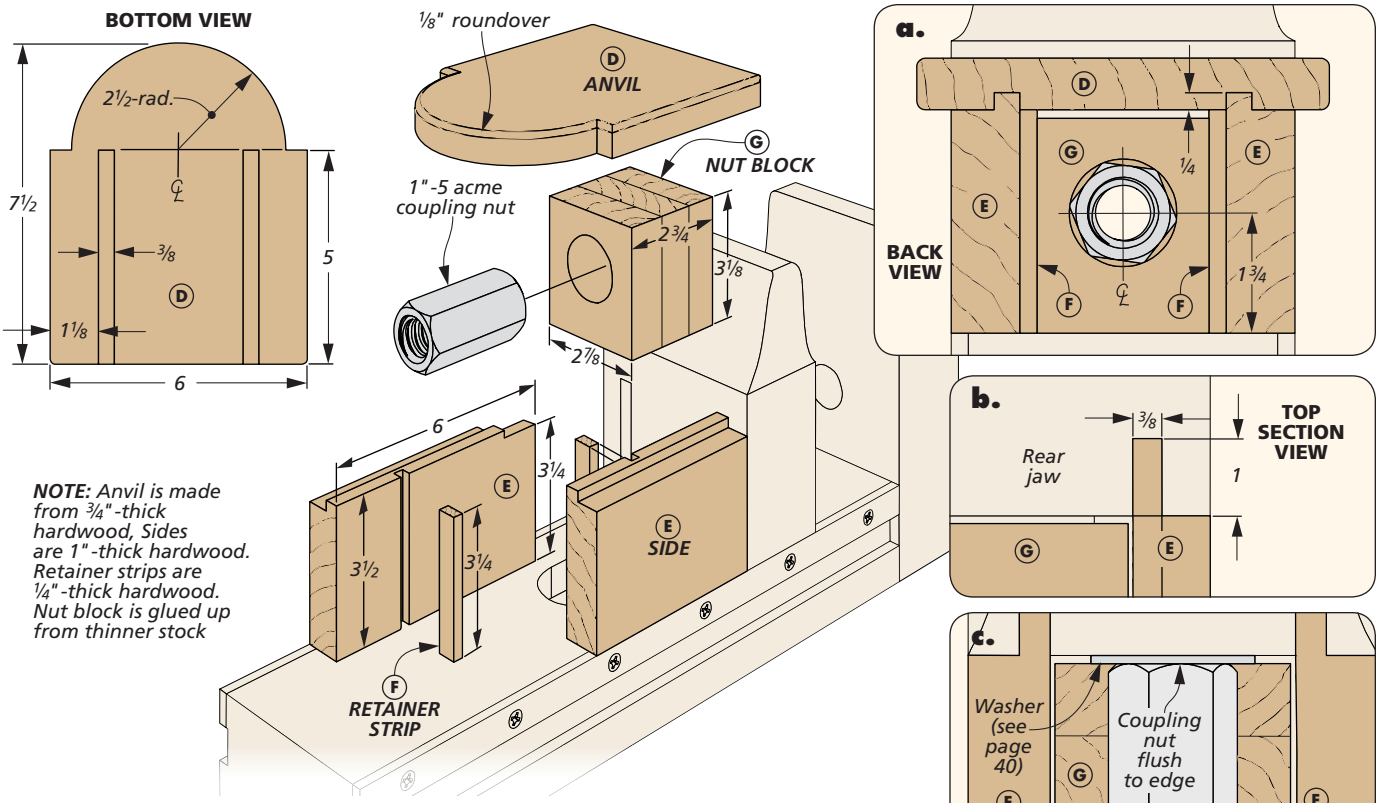

NOTE: *Anvil is made from ¾"-thick hardwood, Sides are 1"-thick hardwood. Retainer strips are ¼"-thick hardwood. Nut block is glued up from thinner stock*

Build the REAR ASSEMBLY

At this stage of the game, the front jaw assembly is complete. The assembly that attaches to the rear jaw is up next. The rear assembly, as shown in the drawing above, does a few things.

First, the rear assembly houses an Acme-threaded coupling nut to engage with the vise screw to apply clamping pressure to a workpiece.

Second, the rear assembly supports the rear jaw to keep it rigid during use. Finally, the top of the assembly adds a traditional detail and prevents debris from falling on the vise screw.

ANVIL. While it's made from wood, the cap of the rear assembly is called the "anvil," just like on the back of a machinist's vise. And it's the first piece to make.

On the bottom, cut stopped grooves to accept tongues on the the sides (bottom view and detail 'a'). I cut the grooves the same way as the mortises in the rear jaw. The box below shows the rest of the steps in making the anvil.

How-To: MAKE THE ANVIL

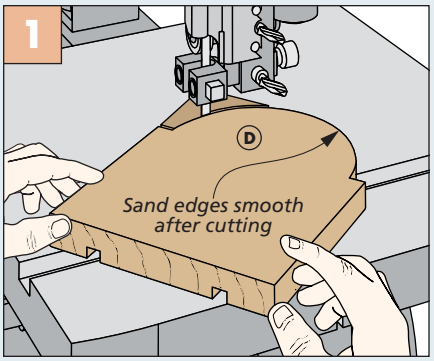

Shape the Anvil. Cut the curved end of the anvil at the band saw after making the two shoulder cuts.

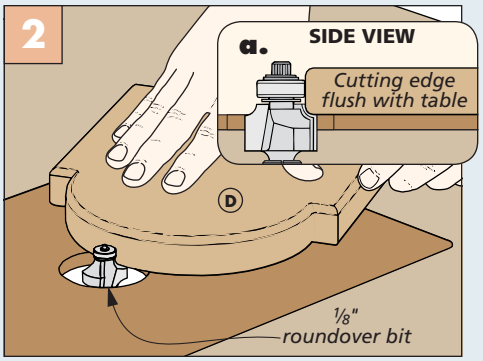

Roundovers. Round over the upper and lower edges of the anvil except for the edges that butt against the rear jaw.

▲ **Shop Tip.** Use a file to complete the roundover in the shoulder of the anvil.

SIDES. The two sides come next. These have a few details to consider. The first is cutting a dado to accept hardwood strips that hold a nut block in place, as shown in Figure 1 below.

From there, it's on to forming a tongue on the upper edge of each piece, as you can see in Figure 2. It's a good idea to start with the blade set a little low. This allows you to make these cuts in several passes (raising the blade slightly) to sneak up on a snug fit. Finally, Figure 3 details a similar setup to form the cheeks of a tenon to fit the mortise in the rear jaw (detail 'b' on the previous page). Trim the top shoulder of the tenon so that it fits into the mortise.

COME TOGETHER. After cutting the two retaining strips to fit the dadoes, you can grab the glue bottle and clamps to do a little assembly. Begin by gluing the sides into the rear jaw. Then glue the anvil to the top. Figure 4 shows how to fit the retaining strips. To avoid squeezeout, you only need a small amount of glue for a solid connection.

NUT BLOCK. The final piece you need to make for this assembly is a nut block. It houses a large coupling nut and keeps it from rotating as the vise screw is turned. What's unusual about the block is that it isn't glued in place. Instead, it floats in the pocket formed by the rear jaw, sides, and anvil, as in the main drawing and detail 'c' on the previous page.

The block is glued up from thinner material and cut to final size, as you can see in Figure 5 below. At the drill press, drill a hole through the block that just matches the outside diameter of the coupling nut. The nut I used required a 1⅝"-diameter Forstner bit. The hole isn't centered in the block, as shown in Figure 6. Here again, this gives you a little wiggle room for lining up the nut when installing the vise screw.

The nut is glued in place with epoxy. As you do this, there are a couple things to keep in mind. First, take care to prevent epoxy from getting inside the nut. It's pretty difficult to remove.

Second, position the nut so that it's flush with (or slightly proud) of the hole. This way, the nut will bear directly on a washer as clamping force is applied and prevent the nut block (and epoxy) from feeling the strain. That completes the construction of the wood parts of the vise. Now it's time to add some custom, heavy-duty hardware to make it work.

How-To: CREATE THE REAR ASSEMBLY DETAILS

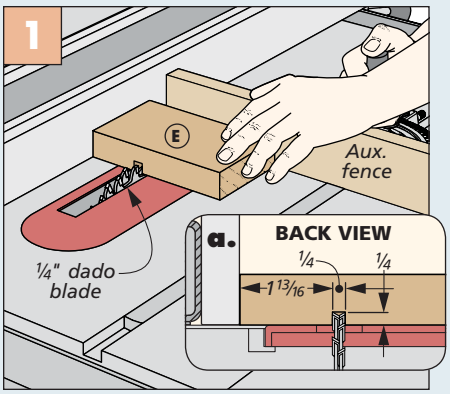

Retainer Dado. Install a dado blade to cut a dado to hold the retainer strip. The rip fence acts as an end stop.

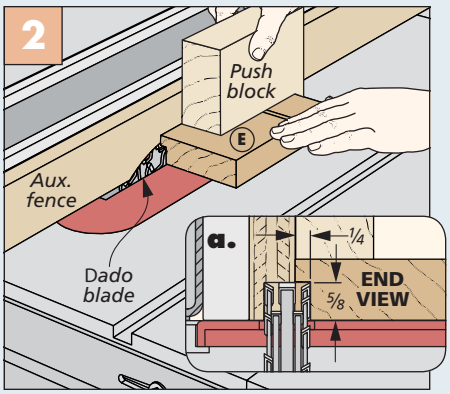

Upper Tongue. Widen the dado blade and recess it in an auxiliary fence to form the tongue on the top edge.

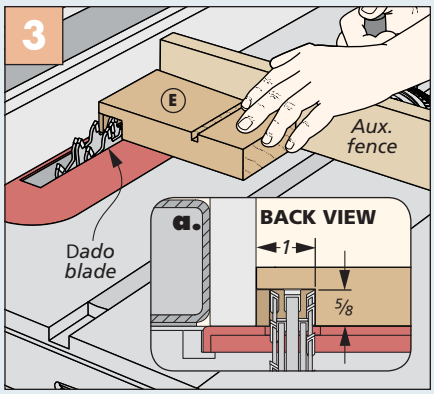

Tenon. The same dado blade can be used to cut the tenon on the end of each side to fit the mortise in the rear jaw.

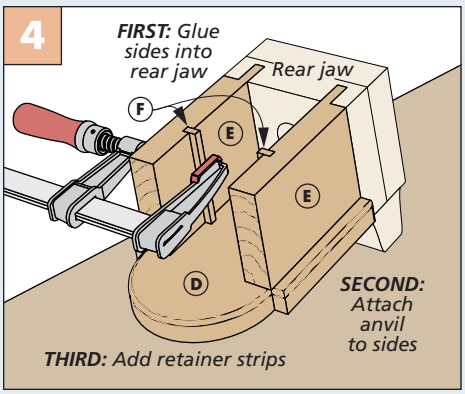

Retainer Strips. Glue the retainer strips in place after assembling the the sides and anvil with the rear jaw.

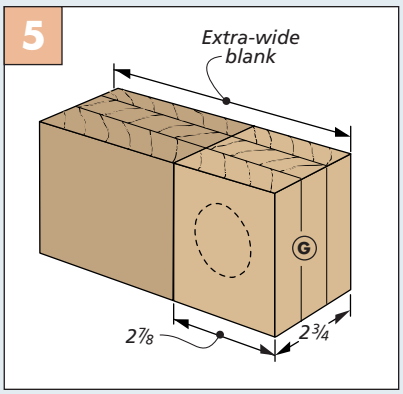

Nut Block. Glue up an oversize blank to create the nut block. Once the glue is dry, trim it to final size.

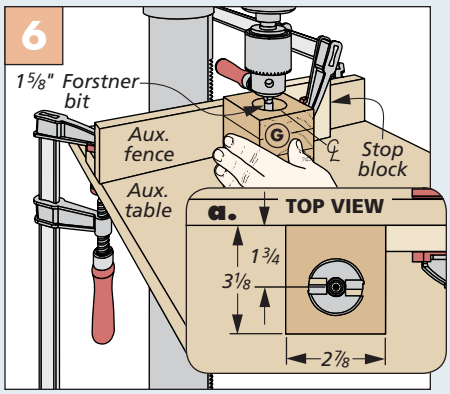

Off-Center Hole. The hole to accept the coupling nut is offset. Take care to orient the nut block correctly.

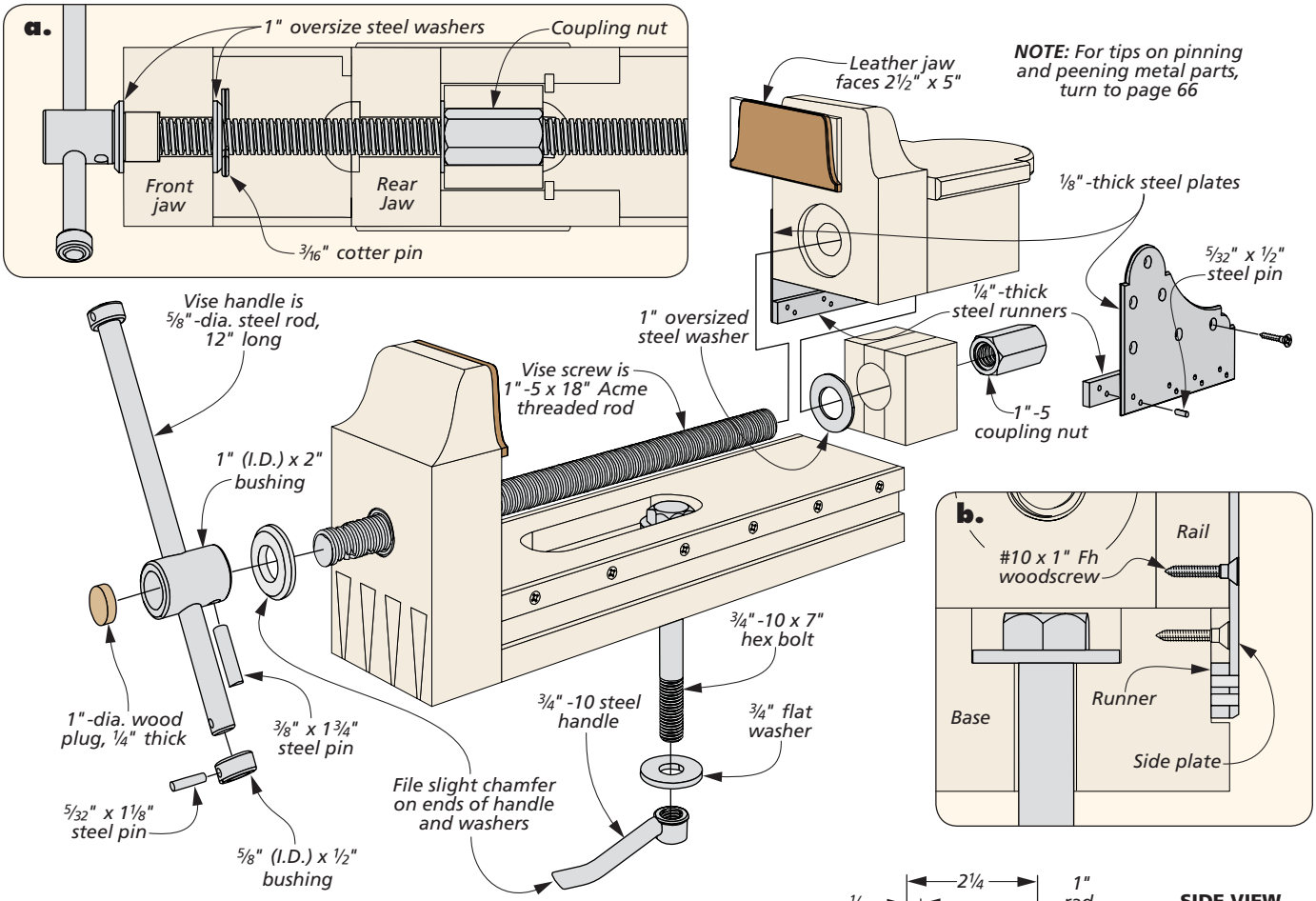

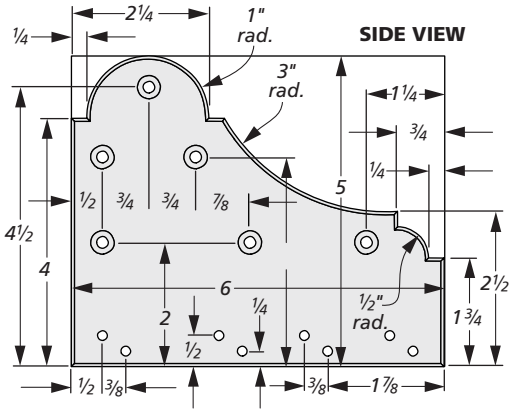

Make CUSTOM HARDWARE

Turning the wood parts into a functioning vise requires some metal components. These include steel plates to secure the rear jaw, a bolt to attach the vise to a benchtop, and a screw assembly that puts the squeeze on a workpiece, as shown in the drawing above.

The vise uses a length of Acme threaded rod for the screw. (For more on Acme threaded rod, turn to page 66.) But in order to make use of that strength, you need to make a hub and handle.

HUB. The hub is a steel bushing that you glue on the end of the screw with epoxy. For a permanent connection, drill a hole through the hub and screw and install a short steel pin. The pin is peened to lock the connection. Turn to Shop Notebook on page 65 for details on the peening process.

NOW, THE HANDLE. Figure 1 on the next page shows what comes next: drilling a hole to accept the stout vise handle. This sliding handle consists mainly of a steel rod. A bushing pinned on each end locks the handle to the hub.

At the end of the hub, I added one last piece of wood. It's a plug that covers the exposed end of the screw and creates a better overall look, as in Figure 2. The next drawing (Figure 3) reveals how to secure the hub and screw assembly to the front jaw. Then you can add the rear jaw assembly, as detailed in Figure 4.

SIDE PLATES. Steel side plates join the rear jaw to the base and allow it to slide smoothly. The plates are shaped by laying out the profile and hole locations (side view drawing above). I colored the surface with a marker to make the marks more visible. Drill and countersink the holes at the drill press. I cut most of the waste away using a hack saw, then filed the edges smooth (Figure 5).

At this point, you can pin steel runners to the lower inside edge, as shown in detail 'b' above. These wrap around the steel rails installed on the base.

The pins are peened just like the pins for the vise screw and then filed and sanded smooth. Figure 6 shows how to install the plates on the rear jaw for smooth operation.

The final addition to the vise is a set of thick leather jaw faces (Drawing above). Then it's just a matter of applying a few coats of finish. At last, you can set the vise on a bench and slip the bolt through the slot and secure it with the handle. W

How-To: MAKE THE VISE SCREW & SIDE PLATES

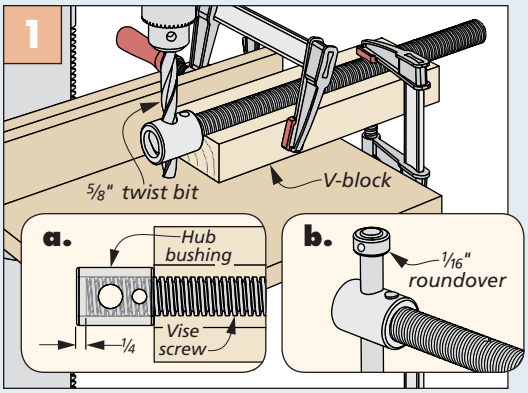

Hub & Handle. A V-block stabilizes the screw to drill the hole for the pin to secure the hub and the larger hole of the handle.

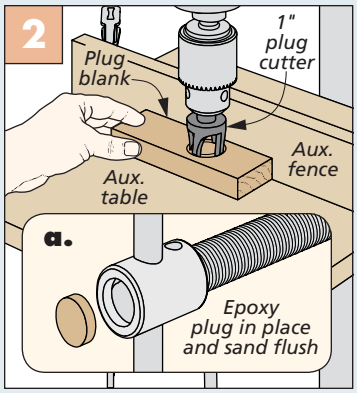

Plug the Hub. Use a plug cutter to create a thin wood plug to give the hub a finished look.

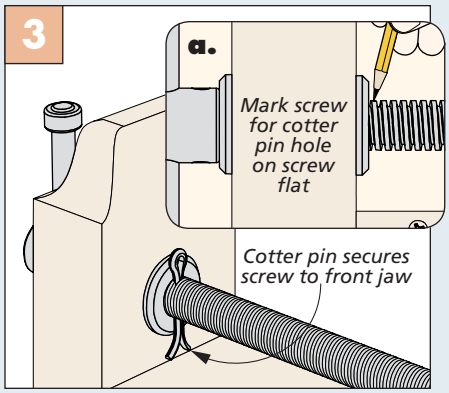

Add a Pin. Install the screw in the front jaw along with a washer. Mark the vise screw for a hole to accept a cotter pin.

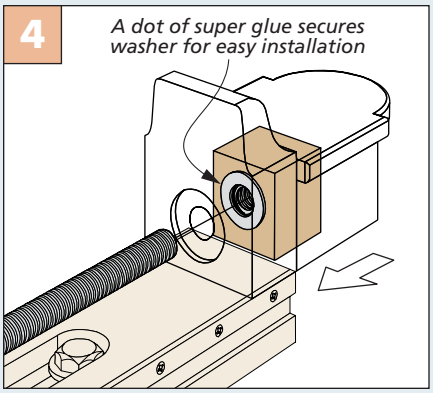

Install Rear Jaw. Slip the nut block into the rear jaw and thread the vise screw through the coupling nut.

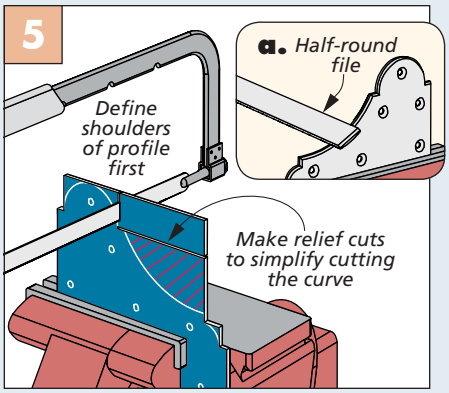

Shape the Sides. A hack saw makes quick work of removing most of the waste. A file refines the profile.

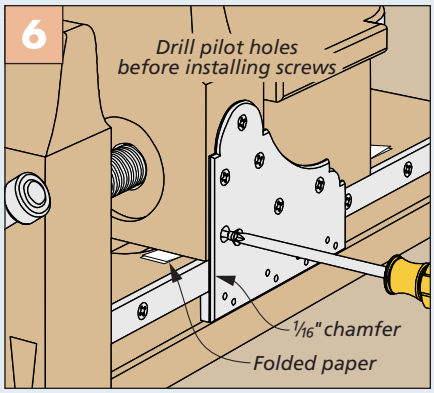

Install the Plates. To provide clearance, slip a folded piece of paper under the rear jaw before installing the plates.

Materials, Supplies & Cutting Diagram

A	Base (1)	2½ x 5 - 20
B	Front Jaw (1)	2½ x 5 - 9
C	Rear Jaw (1)	2½ x 5 - 6½
D	Anvil (1)	¾ x 6 - 7½
E	Sides (2)	1 x 3½ - 6
F	Retaining Strips (2)	¼ x ½ - 3¼
G	Nut Block (1)	2¾ x 2⅞ - 3⅛

- (1) 1" (I.D.) x 1" Bronze Bushing
- (2) ¼"x ¾"- 24" Steel Bars
- (12) #10 x 1¼" Fh Woodscrews
- (1) 1"-5 Acme-Threaded Coupling Nut
- (1) 1"-5 x 18" Acme-Threaded Rod
- (1) 1" (I.D.) x 2" Steel Bushing
- (1) ⅜"-dia. x 1¾" Steel Rod
- (1) ⅝"-dia. x 12" Steel Rod
- (2) ⅝" (I.D.) x ½" Steel Bushings
- (1) 5/32"-dia. x 24" Steel Rod
- (12) #10 x 1" Fh Woodscrews
- (3) 1" (I.D.) Oversized Washers
- (1) 3/16" Cotter Pin
- (2) ⅛ " x 5" - 6" Steel Plates
- (1) ¾"-10 x 7" Hex Bolt
- (2) ¾" Washers
- (1) ¾"-10 Handle
- (2) 2½" x 5" 12 oz. Leather

1"x 6½" - 24" Beech (1.4 Bd. Ft.)

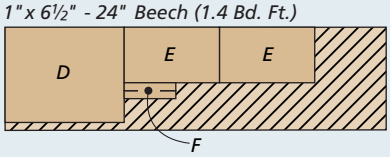

1½"x 5½" - 84" Beech (6.4 Bd. Ft.)

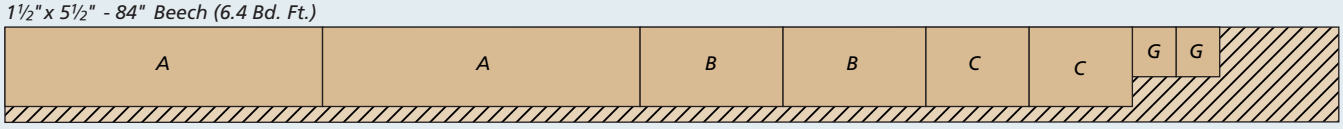

Heirloom Project

welcoming Hall Bench

This stylish project provides plenty of woodworking challenges, and rewards, too.

Almost every home could use a convenient place to corral coats, hats, shoes, and all of the other items that generally accumulate around the entrance. Something with plenty of storage options, but also stylish enough to be put on full display. This combination hall tree and storage bench is just the ticket to rein in your entryway clutter.

STORAGE, STORAGE, & MORE STORAGE. Starting down below, I sized three openings to accommodate a commonly available wire locker basket. These are perfect for holding items such as shoes and lunch boxes. Behind the tall door, you'll find room for longer things, like umbrellas and canes. A trio of hooks up top for coats and jackets, along with a couple smaller cubbies, completes the design. The sturdy seat makes it a great staging area for putting on your shoes before heading out the door.

Barn boards for the back and door panel add some real country flair, while a painted finish allows for the use of inexpensive poplar lumber.

Construction Overview / OVERALL DIMENSIONS: 41"W x 74"H x 18"D

A divided shelf up top is perfect for storing hats and gloves

Reclaimed barn boards along the back (and the door panel) add a rustic feel to the bench

A simple shop-made molding wraps the top and bottom of the bench

The enclosed upper section is perfect for longer items

An extra-wide stretcher provides a solid mounting surface for a few coat hooks

Main components of the bench are made from inexpensive poplar lumber

The narrow door uses sturdy stub tenon and groove joinery

Shop-made base molding provides solid protection around the bottom

NOTE: Turn to Sources on page 67 for hardware and paint information

The three compartments under the seat are sized to hold commonly available wire baskets

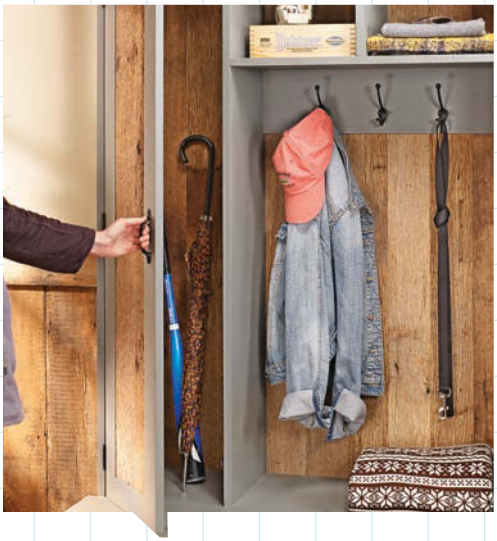

◄ Longer items can be stored neatly out of sight behind the enclosed section.

Locker baskets below offer a convenient place for holding sports equipment. ►

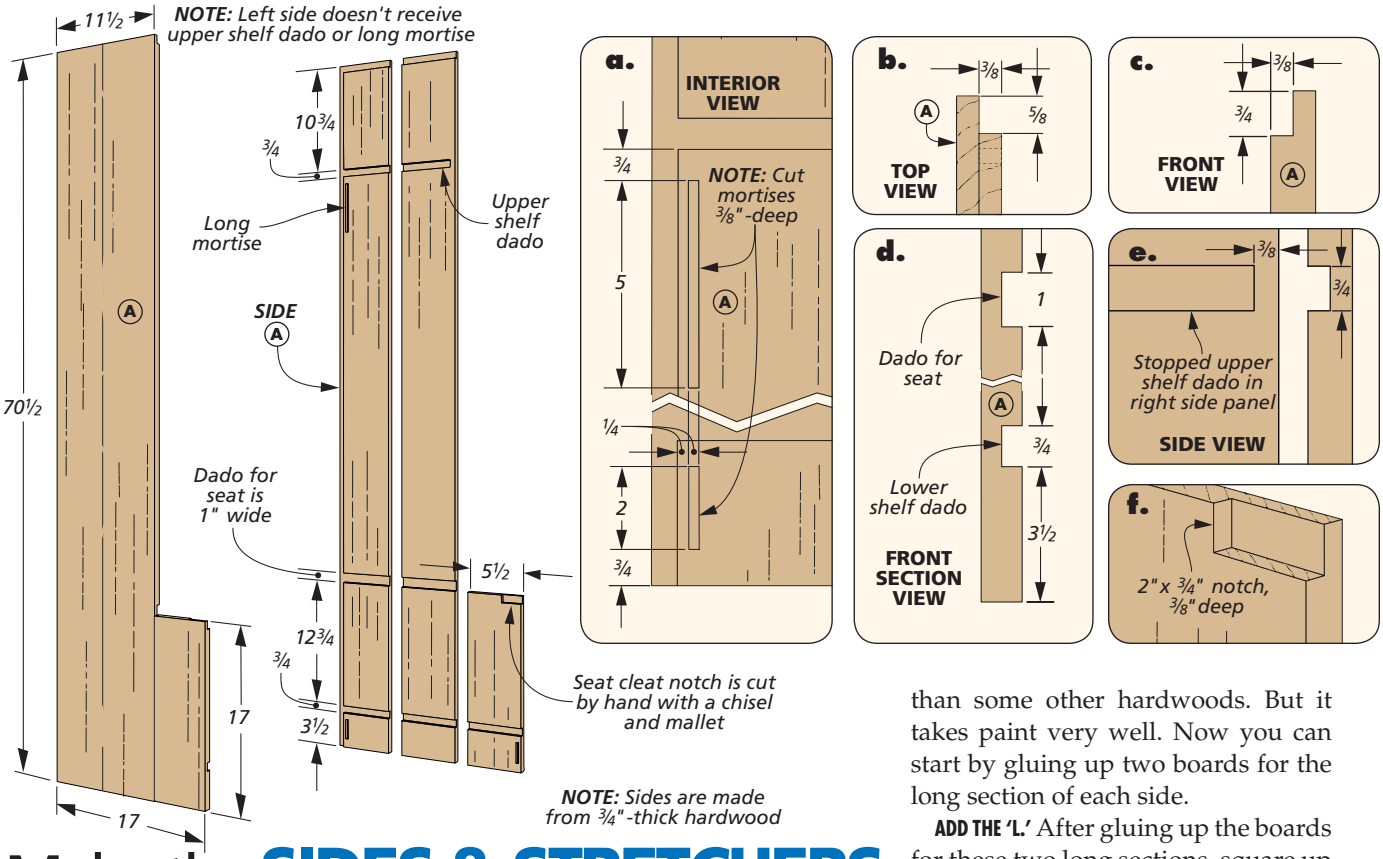

Make the SIDES & STRETCHERS

The largest pieces by far on this project are the two L-shaped side panels. These panels require several grooves, dadoes, rabbets, and mortises that work to hold the hall bench together.

Because they are so wide, I glued the sides up from narrower stock as you can see in the drawings above. Connecting the two sides are a series of stretchers and cleats that fit into the mortises and rabbets.

LUMBER CHOICE. Before starting, just a quick note about my lumber selection. Since I had plans to paint my hall bench, I opted to use poplar lumber which mills easy and is less expensive than some other hardwoods. But it takes paint very well. Now you can start by gluing up two boards for the long section of each side.

ADD THE 'L.' After gluing up the boards for these two long sections, square up the ends to bring them to final length. Then, cut the short sections that complete the "L" shape to size. These pieces simply get glued and carefully clamped in position flush with the bottom edge of the long panels.

MIRROR-IMAGE SIDES, ALMOST. With the glued-up sides in hand, you can now turn your attention to creating all of the joinery. As shown in the main

How-To: CUT MORTISES, RABBETS & DADOES

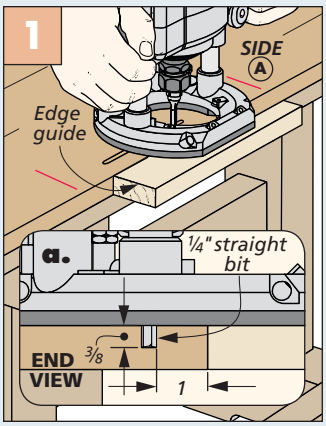

Mortises. A plunge router makes quick work of the mortises in the sides.

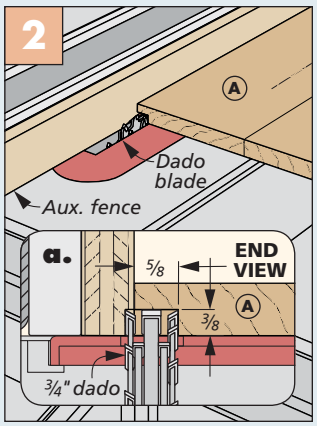

Rabbets. Move to the table saw to cut the rabbet along the back edge.

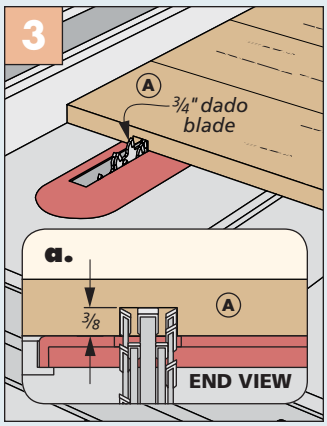

Through Dadoes. Stick with the dado blade to cut the through dadoes, as well.

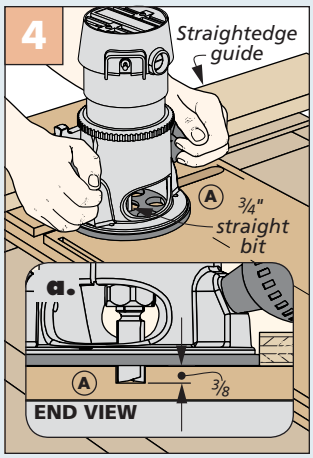

Stopped Dadoes. A router and straightedge work well for the stopped dadoes.

drawing on the previous page, the sides are virtually mirror-images of one another, with a couple of exceptions. The right side has a long mortise along the upper back edge to hold a wide coat hook stretcher, as well as a stopped dado for the shelf.

With this information in mind, lay out the positions for all of the mortises, rabbets, and dadoes on each side panel. All of this joinery is pretty straightforward to create. The How-To box at the bottom of the previous page shows the method (and the order) I followed to cut everything.

One note of caution — once the rabbets along the back edges are cut, only a thin piece of material will separate them from the mortises along the back edge. For this reason, I opted to cut the mortises first to avoid splintering out the material. Just be sure to take into account the depth of the rabbet when laying out the mortises.

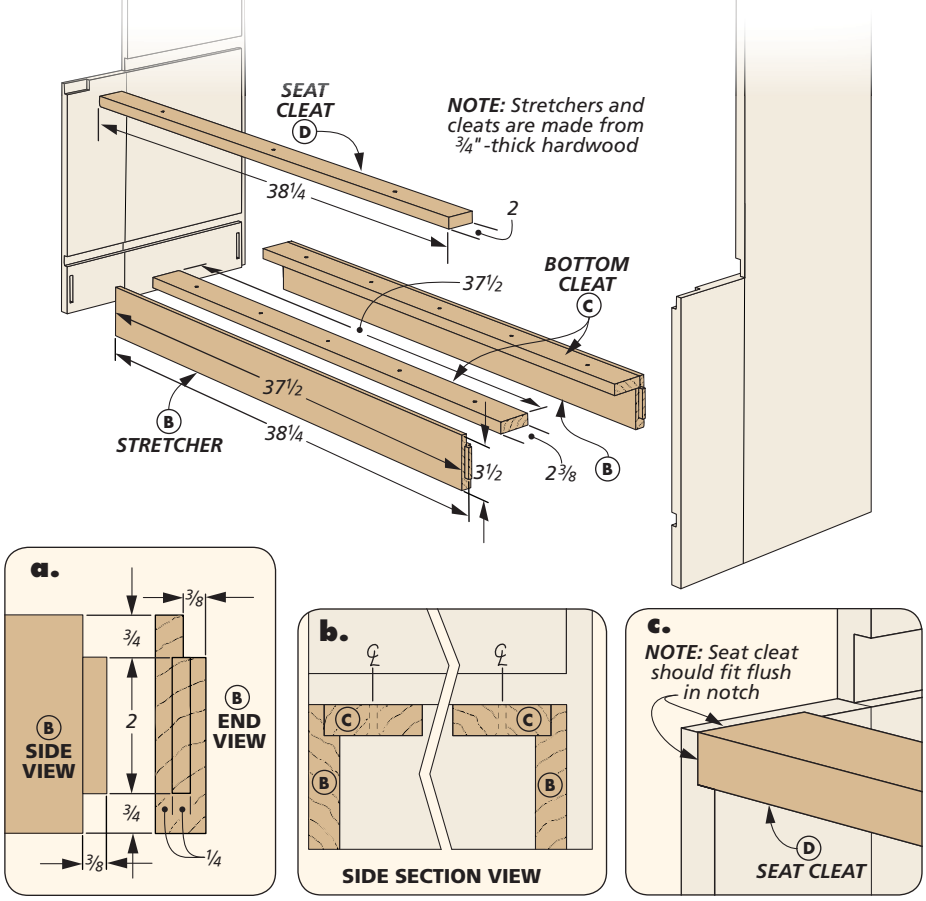

STRETCHERS & CLEATS

The two sides are connected through a series of stretchers and cleats, as shown above. The three cleats are just squared up pieces of stock with mounting holes drilled in them for attaching to the main case parts in a bit. The stretchers, however, require just a little more work.

The How-To box below provides all of the details you'll need. The rabbets along the top edges hold the cleats, while the tenons on the ends will fit the short mortises in the sides.

TEST FITTING. After the stretchers were made, I did a test fit of all of these parts and the sides. The stretchers are inserted into the mortises first. I used a couple of clamps to loosely hold them in position. The three cleats can then be slipped into place and the clamps snugged up.

At this point, I didn't want to glue any parts to the sides until I had a few more parts ready to assemble. I did, however, glue the two bottom cleats into the rabbets in the stretchers while things were clamped up. Just be careful not to get any glue near the sides.

How-To: CUT STRETCHER RABBETS & TENONS

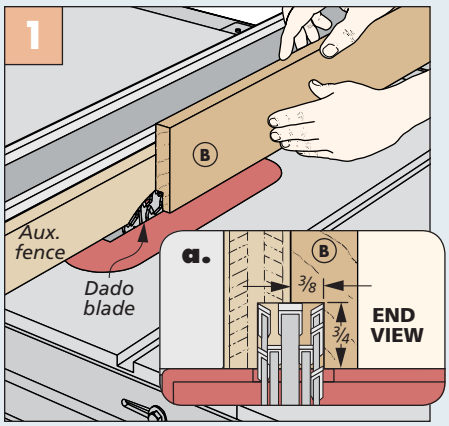

Rabbet Stretchers. A dado blade buried in an auxiliary fence is the quickest way to cut these rabbets.

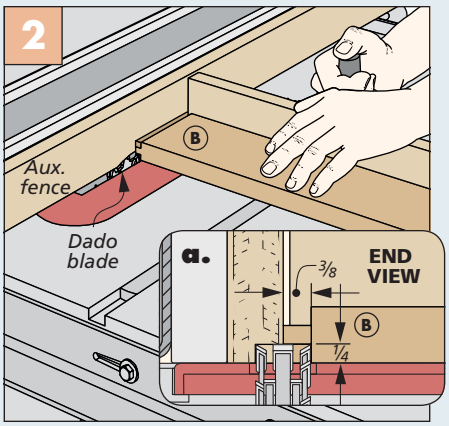

Tenon Cheek Cuts. Lower the dado blade to make the cheek cuts on the ends of the stretchers.

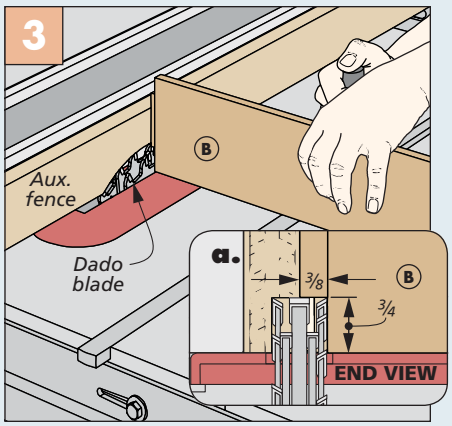

Tenon Shoulders. Now flip the stretchers on edge and using the miter gauge, make the shoulder cuts.

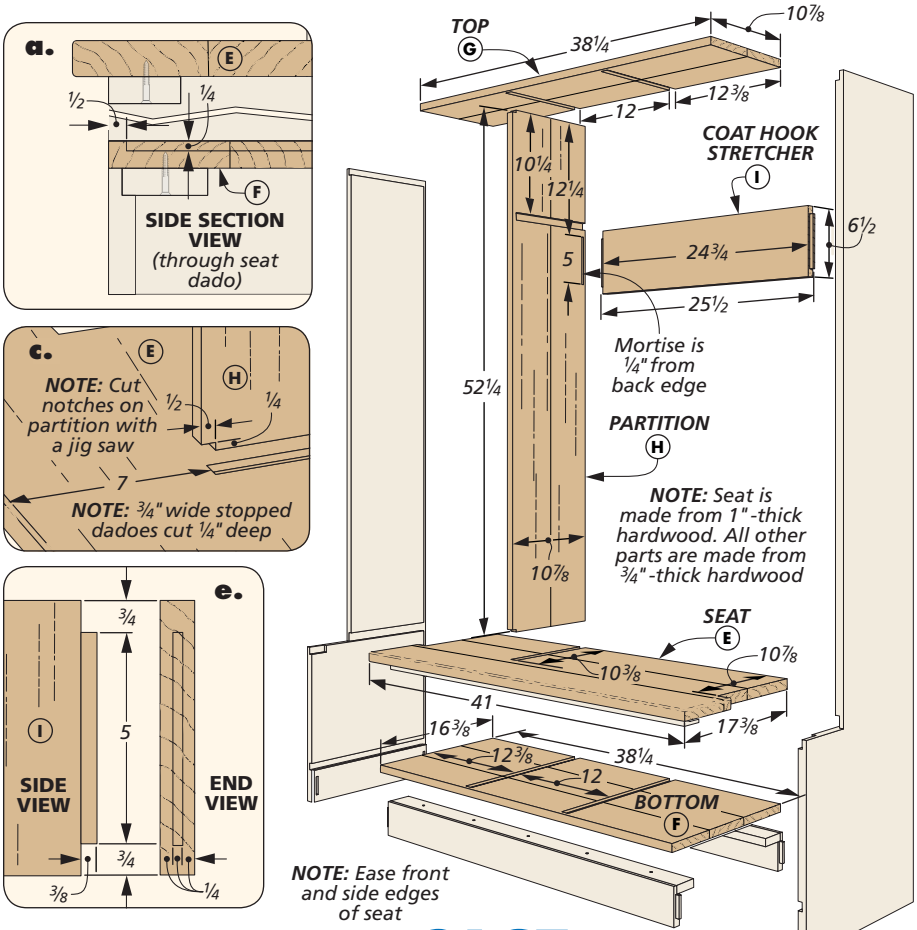

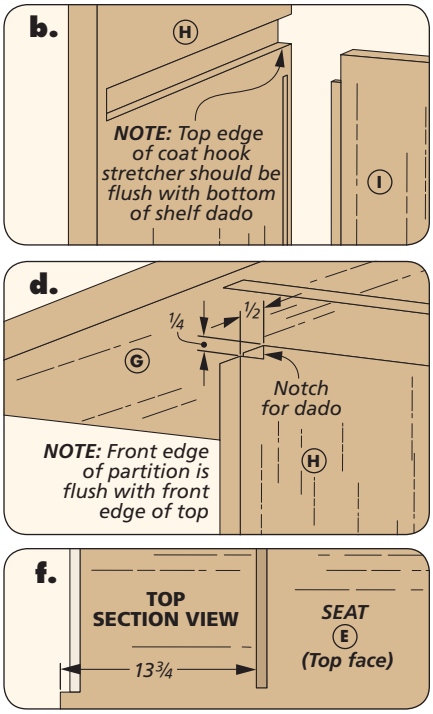

Complete the CASE

Now that the basic case is established with the completion of the sides, stretchers, and cleats, it's time to make a few more case parts before doing some partial assembly work. Here, you'll add the top and bottom panels, as well as the seat, an upright partion to divide the upper section, and a wide stretcher that'll hold a few coat hooks later on.

A THICK SEAT. The seat is a full 1" thick and, like the sides, I glued up narrower stock to make this panel. While you're in panel glue-up mode, it's a good time to also edge glue 3/4"-thick stock for the bottom, top, and upright partition. You can set these other parts aside for now and continue working on the seat.

After the seat is squared up, you'll return to the hand-held router and straightedge method to create some more stopped dadoes on the top and

How-To: ROUT STOPPED DADOES

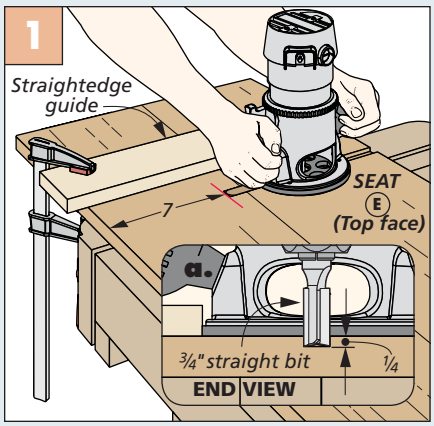

Stopped Dado. One stopped dado is needed in the top of the seat to hold the vertical partition.

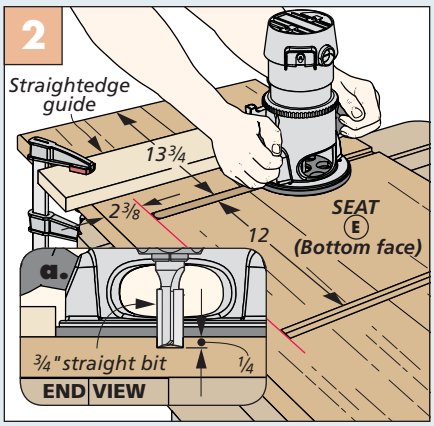

Pair of Dadoes. The underside of the seat calls for two stopped dadoes to secure the lower dividers.

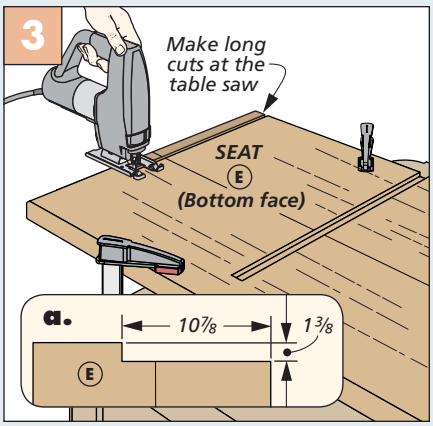

Seat Notches. After making the long cuts at the table saw, finish up the notches with a jig saw.

bottom of the seat (Figures 1 and 2, previous page). Finish up the seat by notching the edges. I made the long cuts at the table saw and finished them up with a jig saw (Figure 3).

MORE PANELS. With the seat finished, it's time to go back to the bottom, top, and upright partition that you glued up earlier. Each one of these pieces has stopped dadoes on one face. So after cutting them to size, you'll grab the router again to make these cuts, as shown in Figure 1 at right.

The upright partition requires a couple more minor things before moving on. First, the front corners of the partition are notched so that the panel fits into the stopped grooves in the top and seat. A jig saw or hand saw is the way to go here (Figure 2).

Also, you'll need to cut another shallow mortise to hold the other end of the coat hook stretcher. I again turned to the plunge router for this. And speaking of the coat hook stretcher, now's a good time to shape this part and cut the tenons on the ends (Figure 3). Use the same method here as the stretchers earlier.

CASE ASSEMBLY

Before jumping right into gluing up the entire case, I did one more thing to make the glue-up easier. I performed another test run like before, but added in the bottom and seat this time. While the clamps were holding things together (but no glue yet), I marked the position of the cleats on the underside of the bottom and seat and screwed these parts in place, as shown in Figure 4.

ADD SOME GLUE. Now you can start to bring parts together with glue and clamps. Start with the bottom and seat (and their attached stretchers and cleats) as shown in Figure 5.

After the glue dries, Figure 6 shows the next part of the process. Start by positioning the upright partition in the stopped dado in the seat. Angle the partition and stick the coat hook stretcher in place in the mortises. The top simply drops in place over the partition and in the rabbets in the sides. A few long clamps hold it all together.

How-To: CUT JOINERY & ASSEMBLE

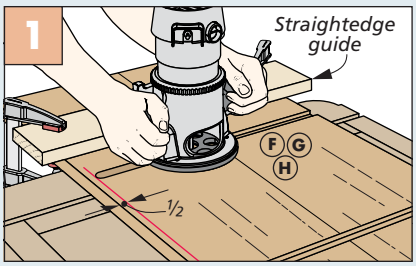

More Dadoes. Use the same method as before to make the stopped dadoes in the top, bottom, and partition.

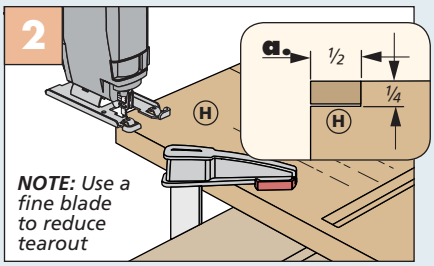

Partition Notches. A jig saw is all that's needed to make the small notches in the partition.

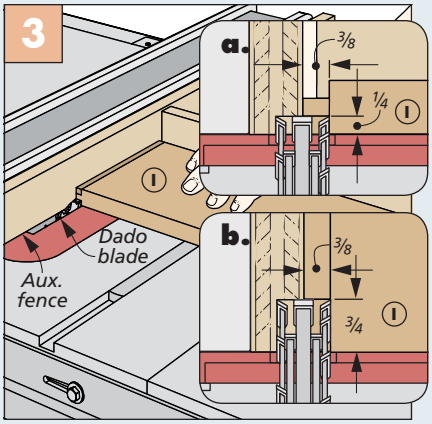

Stretcher Tenons. Head back to the table saw to make the tenons on the ends of the coat hook stretcher.

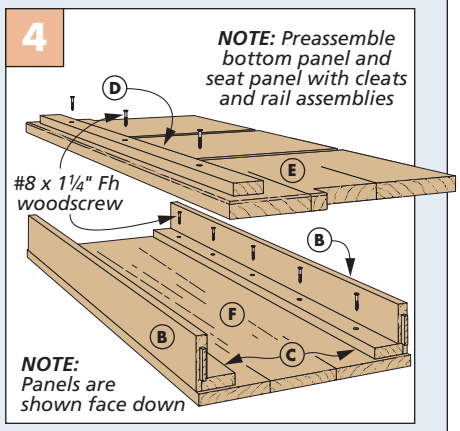

First Stage. After marking their locations, attach the cleats to the underside of the seat and bottom.

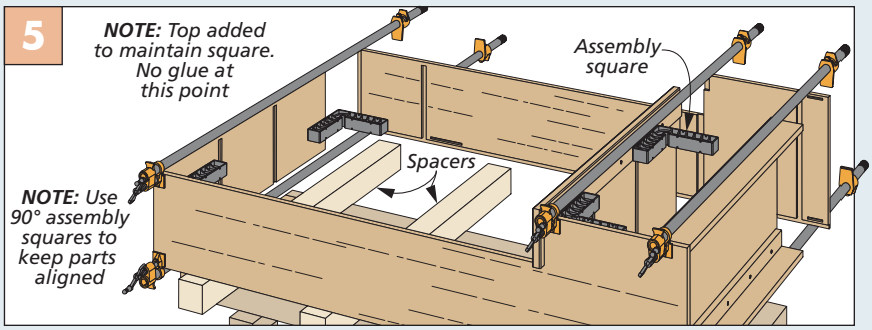

Second Stage. Using spacers to provide clearance for the clamps, the bottom and seat assemblies can be glued to the sides.

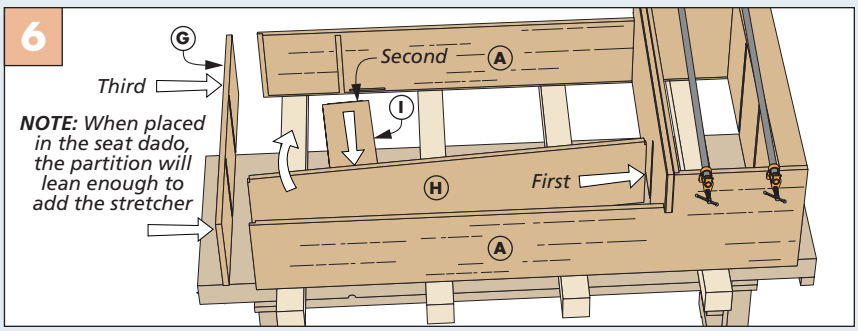

Third Stage. Slip the partition in place, first. Then add the coat hook stretcher. The top is the final piece to clamp in position.

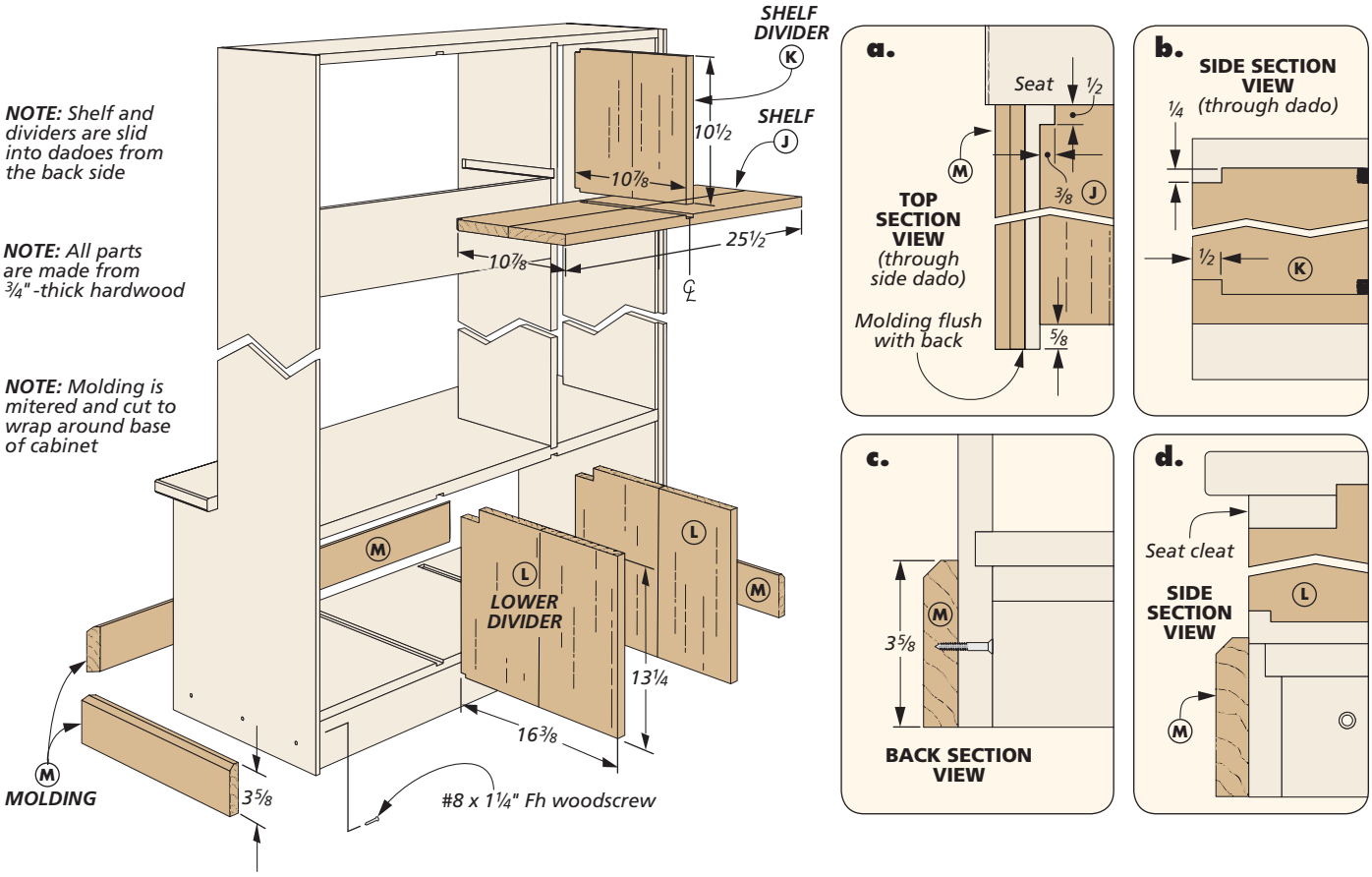

Add DIVIDERS, MOLDING & DOOR

The basic case is looking pretty good at this point. But a few more things will really add to the storage capabilities of this hall bench. A couple dividers down below makes better use of the available space, while a divided shelf up top accomplishes the same thing. You'll finish up with a shop-made molding around the bottom of the case and an easy-to-build inset door that makes use of a rustic-looking barn board panel to top things off.

SHELF & DIVIDERS. There's nothing tricky to making the shelf. It requires a stopped dado using the same method as before (Figure 1). And the front corners are notched using a hand or jig saw. Since I needed to slide this part into the

How-To: MAKE DIVIDERS & MOLDING

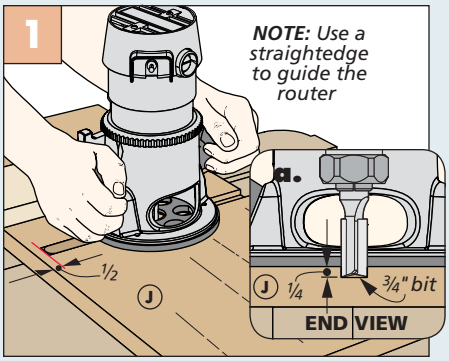

Stopped Dado in Shelf. Once again, use a straightedge and router to make the stopped dado in the shelf.

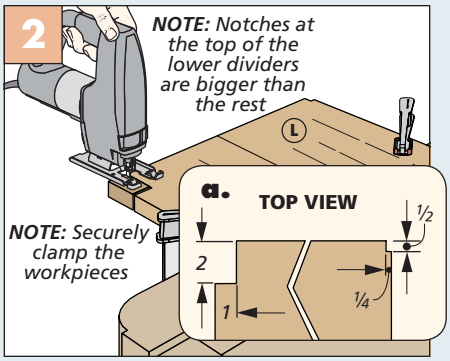

Notch Dividers. Pull out the jig saw one more time to trim the notches on the corners of the dividers.

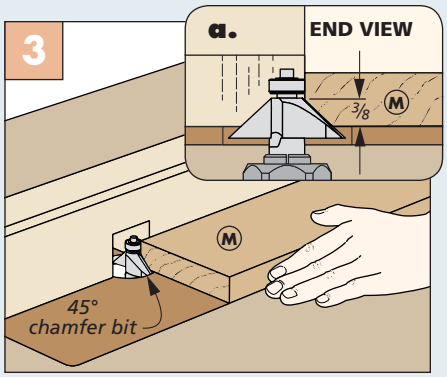

Chamfer Molding. A 45° chamfer bit is used to create the profile on the top edge of the molding for the bottom.

stopped dadoes in the side and partition from the back side, I slightly eased the ends of the shelf with some sandpaper. This allows the shelf to slide in with just a few light taps from a mallet.

The dividers only require notches on the front corners to complete them (Figure 2, previous page). I eased the edges on these parts, as well, before gluing them in position. They slide in from the back side like the shelf.

MOLDING. To finish up the bottom of the case, I turned to a simple shop-made molding. A chamfer along the top edge is made at the router table as shown in Figure 3 on the previous page. Then miter the corners and attach it around the bottom. I used a few screws on the side molding pieces to allow for wood movement.

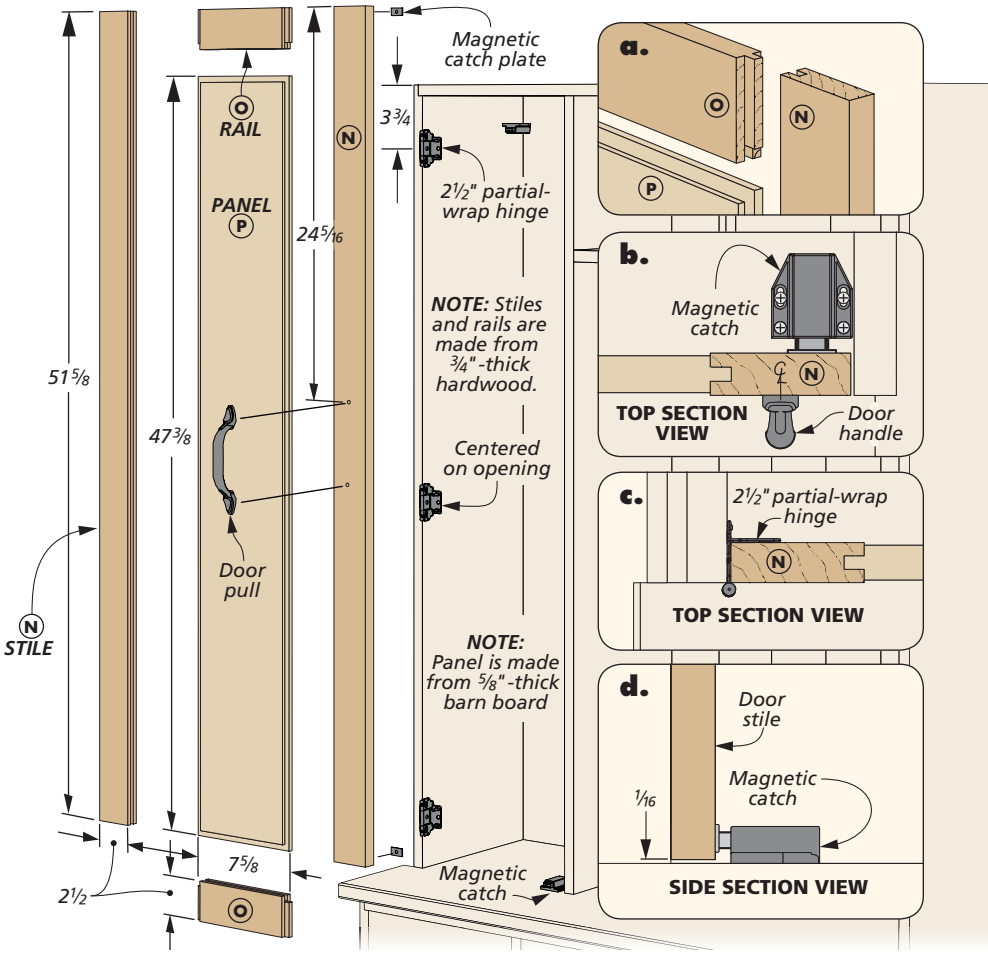

RUSTIC DOOR

A narrow door is the final piece needed to finish off the middle of the case. As I mentioned before, I used a piece of aged barn board for the center panel.

I purchased my barn board from an online dealer. Their information can be found in Sources on page 67. But this might be an item that you can find locally from a specialty supplier. Rough-sawn cedar could be used instead if you don't have access to barn board.

STUB TENON & GROOVE. Surrounding the barn board door panel is a simple frame that utilizes stub tenon and groove joinery. Figures 1 and 2 below provide the details for cutting the centered grooves on the stiles and rails, as well as cutting the short tenons on the ends of the rails.

PREPARE PANEL. The door panel needs to be ⅝" thick. This is the same thickness you'll make the boards for the back. If you need to plane your stock down, be sure to only plane the back face to keep the "weathered" show face in it's roughened condition.

Cutting the tongue around the perimeter of the panel goes pretty quick at the table saw (Figure 3). You can then glue up the door frame and panel. The hinge, handle, and catch locations are shown in the drawings above. Now, just a few more things are needed to finish up.

How-To: CUT CENTERED GROOVE, TENONS & RABBETS

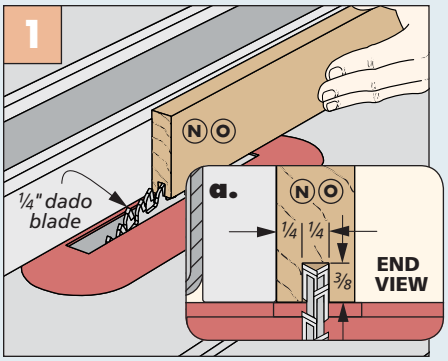

Centered Grooves. Use a dado blade to make the centered grooves along the inside edge of the rails and stiles.

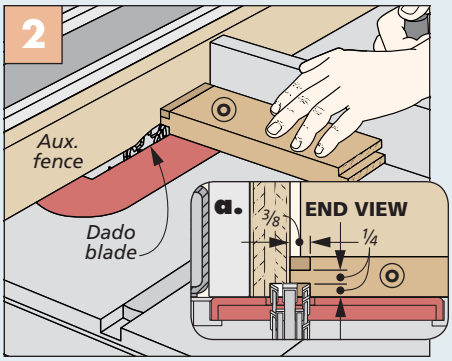

Rail Tenons. Using the table saw to cut the tenons on the rails should be pretty familiar to you by now.

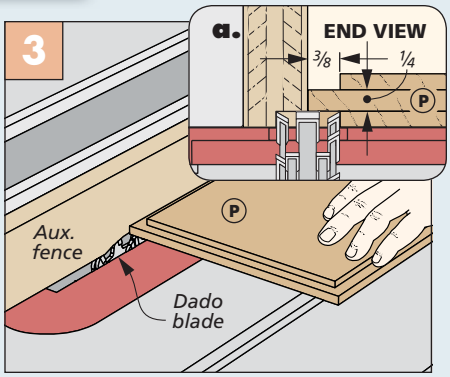

Rabbeting Door Panel. Lower the dado blade and rabbet all four edges of the door panel to create a tongue.

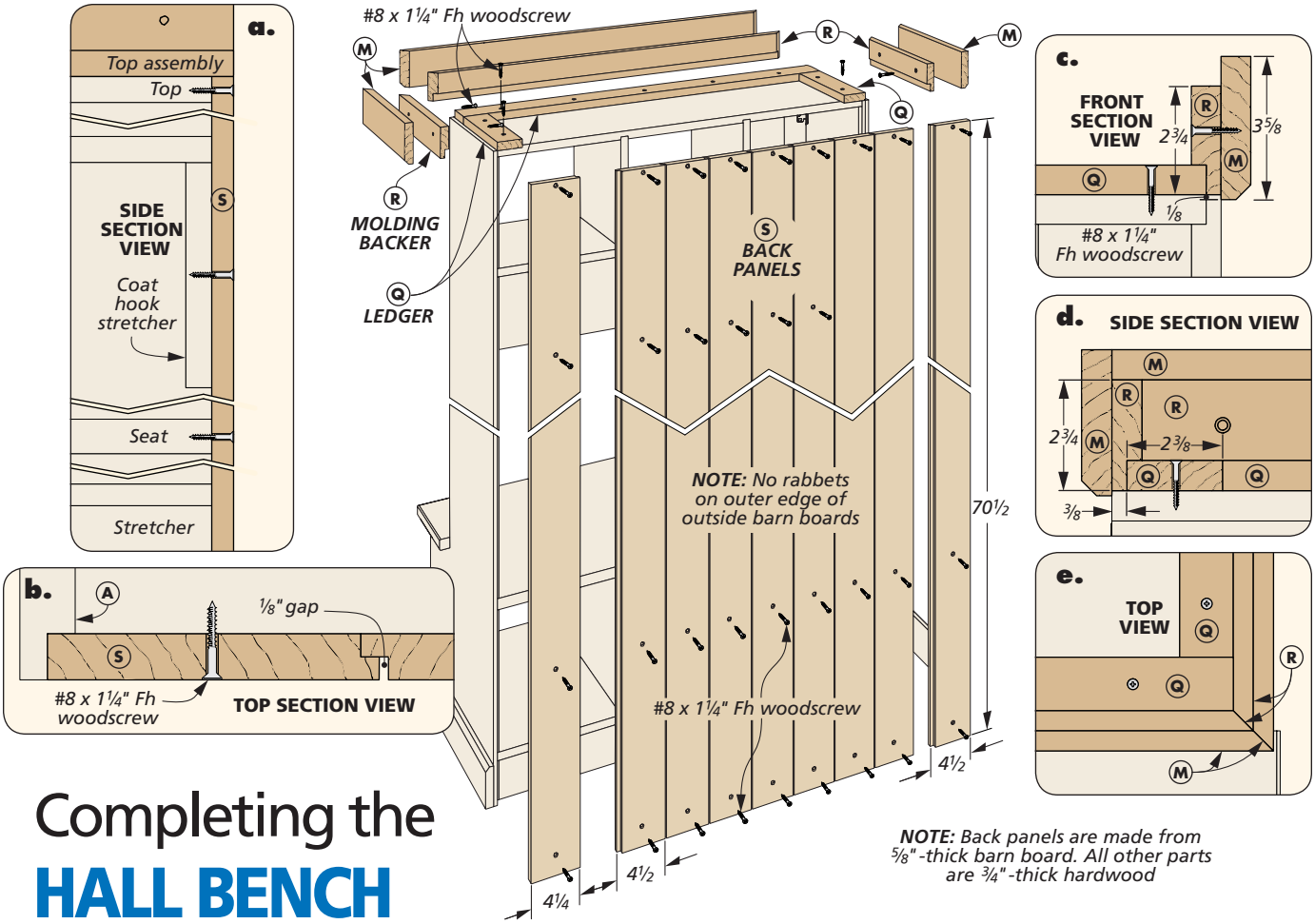

NOTE: Back panels are made from ⅝"-thick barn board. All other parts are ¾"-thick hardwood

Completing the HALL BENCH

You're now clearly in view of the finish line with this project. The barn boards for the back and a molding treatment around the top wrap things up.

THREE-LAYER MOLDING. The actual molding around the top is the same that you used on the bottom of the bench. However, the upper version requires some backer material to mount it to. And that starts with a few simple ledger boards screwed to the top. Details 'c' and 'd' above provide more information on where to mount them. The next 'layer' is the molding backer. After cutting a rabbet along one edge (Figure 1), you'll miter the ends and attach these pieces to the ledger boards.

The molding slightly overlaps the lower edge of the backer, as shown in detail 'c.' Again, I used screws from the inside to attach the molding pieces on the sides to allow for wood movement.

How-To: CUT THE RABBETS

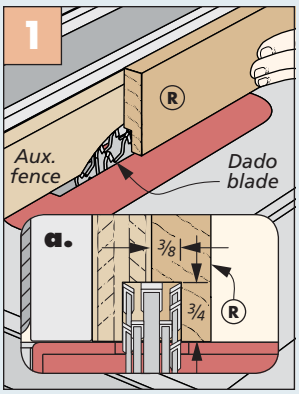

Molding Backer. Rabbet the molding backer at the table saw.

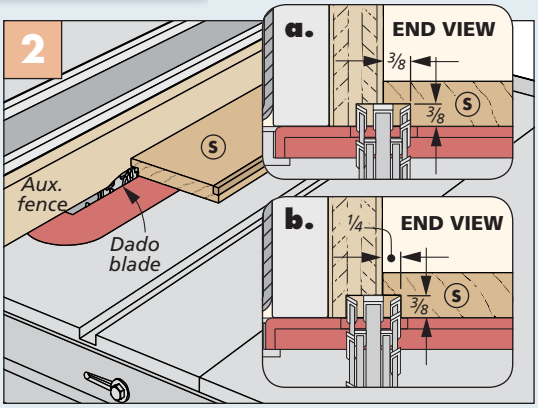

Rabbet Barn Boards. Two widths of rabbets are required on each back panel (details 'a' and 'b'). This creates the gap between the boards.

BARN BOARD BACK

The weathered barn boards require just a little attention before they can be added to the back. Like the door panel earlier, the boards for the back need to be planed to a finished thickness of ⅝". After they're all planed and cut to size, make a trip over to the table saw one more time.

RABBETED JOINT. Since there's a real possibility of the barn boards contracting over time, I wanted a joint between the boards that would hide any shrinkage. I opted to make a simple rabbet along the edge of each board

to create an overlapping edge joint. Detail 'b' and Figure 2 on the previous page show the details.

The main drawing on the previous page shows where to drive screws to attach the boards to the case. Work from right to left when installing them. It may be necessary to rip a little off the outside edge of the last board. The final bit of hardware is shown at right. You can check out the Sources on page 67 for the paint I used on my bench. W

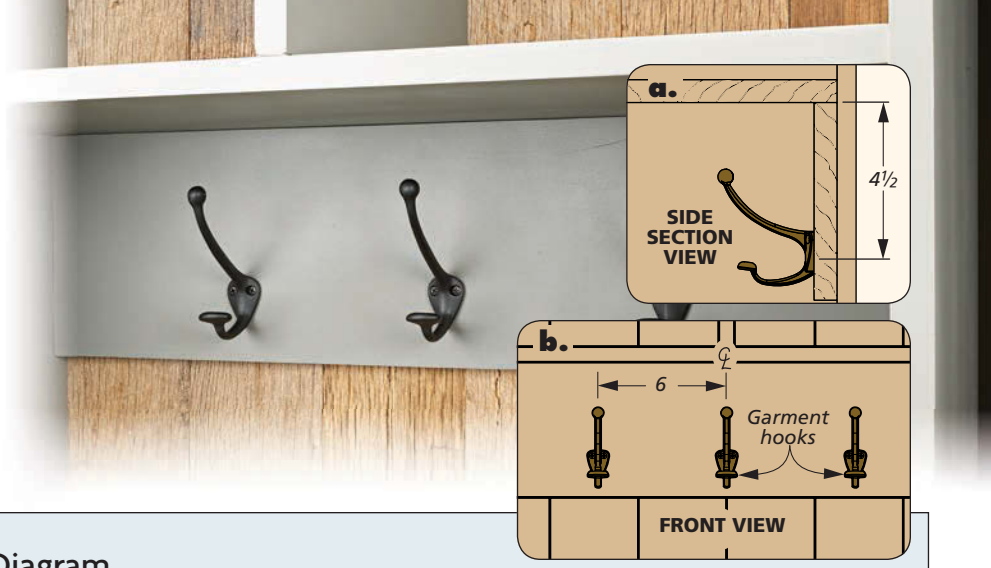

Materials, Supplies & Cutting Diagram

A	Sides (2)	¾ x 17 - 70½	**J**	Shelf (1)	¾ x 10⅞ - 25½	**S**	Back Panels (9)	⅝ x 4½ - 70½
B	Stretchers (2)	¾ x 3½ - 38¼	**K**	Shelf Divider (1)	¾ x 10½ - 10⅞			
C	Bottom Cleats (2)	¾ x 2⅜ - 37½	**L**	Lower Dividers (2)	¾ x 13¼ - 16⅜	•	(3) Chrome Wire Baskets (painted black)	
D	Seat Cleat (1)	¾ x 2 - 38¼	**M**	Molding	¾ x 3⅝ - 150 rgh.	•	(2) Magnetic Latches w/screws	
E	Seat (1)	1 x 17⅜ - 41	**N**	Door Stiles (2)	¾ x 2½ - 51⅝	•	(3) Partial Wrap Inset Hinges w/screws	
F	Bottom (1)	¾ x 16⅜ - 38¼	**O**	Door Rails (2)	¾ x 2½ - 7⅝	•	(3) Garment Hooks w/screws	
G	Top (1)	¾ x 10⅞ - 38¼	**P**	Door Panel (1)	⅝ x 7⅝ - 47⅜	•	(1) Door Pull w/screws	
H	Partition (1)	¾ x 10⅞ - 52¼	**Q**	Ledger	¾ x 2⅜ - 68 rgh.	•	(65) #8 x 1¼" Fh Woodscrews	
I	Coat Hook Stretcher (1)	¾ x 6½ - 25½	**R**	Molding Backer	¾ x 2¾ - 68 rgh.			

¾"x 7½" - 72" Poplar (3.8 Bd. Ft.)

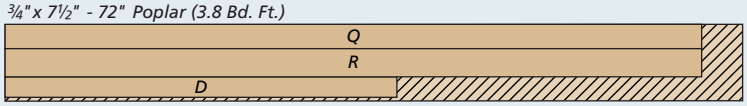

***ALSO NEEDED:** Approximately 22.5 bd. ft. of barn board is required for the door and back panels*

¾"x 7" - 84" Poplar (4.1 Bd. Ft.)

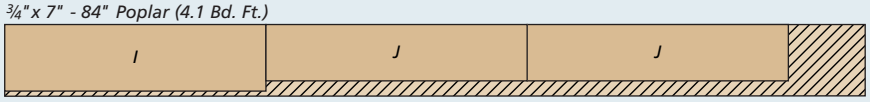

¾"x 6" - 96" Poplar (Six boards @ 4.0 Bd. Ft. each)

¾"x 6" - 96" Poplar (Two boards @ 4.0 Bd. Ft. each)

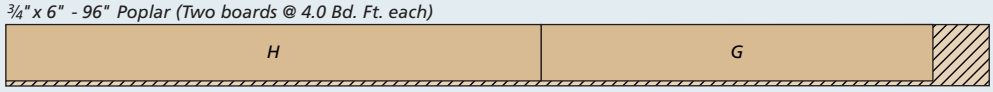

¾"x 6" - 96" Poplar (4.0 Bd. Ft.)

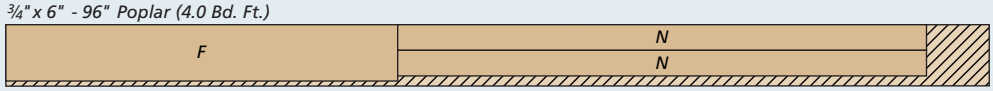

¾"x 6½" - 96" Poplar (Two boards @ 4.3 Bd. Ft. each)

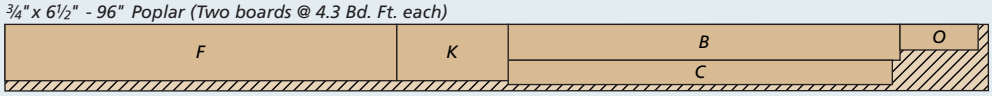

¾"x 7½" - 96" Poplar (5.0 Bd. Ft.)

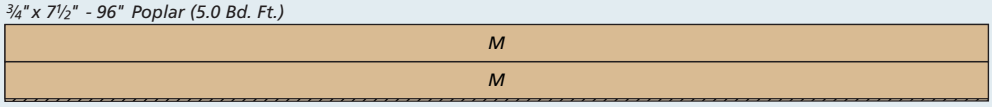

1"x 6" - 48" Poplar (2.5 Bd. Ft.)

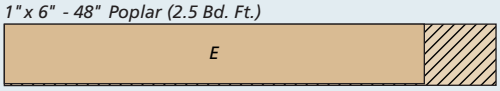

1"x 6" - 84" Poplar (4.4 Bd. Ft.)

strong & stylish

Dovetails on the Band Saw

When it came to joining the front jaw and base of the vise shown on page 36, I really wanted to use dovetails. Strength was my biggest concern. Coming in at a close second is the classic look of the joint. And as woodworkers know, a good-looking tool works better, right? With the decision settled, the trick was how to cut such large joints.

They're too big to tackle with a router jig. The thick parts and large joint surfaces are a challenge for hand cutting — especially if you haven't mastered the technique. That lead me to the band saw.

I use a band saw for ripping thick stock and resawing, so it has the muscle to make the cuts. What it needs is a little help in the accuracy department.

1 A marking gauge leaves a distinct baseline that will come in handy when you pare the joints.

2 Set a bevel gauge to 7° to lay out the pins on the end of the board. Keep the pencil sharp for making fine lines.

3 Transfer the pins to the faces of the workpiece using a square. Clearly indicate the waste areas to avoid confusion.

▲ To quickly set the tilt of the band saw table, make a hardboard gauge with a bevel on the end to match the pin slope.

▲ In order to get the straightest, smoothest cuts, use a rip fence to guide the workpiece. Position the fence so the blade cuts just on the waste side of your pencil lines. For the opposite angles, tilt the table the the other way (inset photo).

The solution takes two forms: First, for the pins, all you need is a rip fence. Since my older saw didn't come with one, I purchased an aftermarket version. For the tails, a simple-to-build jig saves the day (more on this later).

PINS FIRST. Cutting dovetail joints conveniently breaks down into two overall processes: cutting the pins and cutting the tails. I started with the pins cut on the base of the vise.

Laying out the pins only requires a small handful of common tools: a marking gauge, a pencil, a bevel gauge, and a square. The layout steps shown in the photos on the bottom of the previous page are pretty straightforward.

BAND SAW SETUP. The layout guides the cutting at the band saw. Before you can turn on the saw however, it needs a little attention. Essentially, cutting the dovetails is nothing more than making a series of short, straight cuts. So to get the best results, it's a good idea to use a blade meant for straight cutting. I like a ½"-wide blade with four teeth per inch. I want to avoid a lot of cleanup and work directly from the saw. A sharp blade gives you the smoothest, cleanest cuts.

The table needs to be tilted to match the angle of the pins. In order to do that, I made a hardboard gauge, as shown in photo 4 above. The gauge is easier to use than a bevel gauge or trying to see the angle gauge below the saw table.

CUTTING PINS. Once the table is set, positioning the rip fence is the next step. In photo 5, you can see what you're aiming for. Set the fence to cut on the waste side of the line. Then you can make a slow, even cut down to the baseline and pull the workpiece back away.

All the subsequent cuts are just a repeat of the first. Align the blade with the line, lock the fence in place, and make a cut. After you complete the cuts for one side of the pins, you'll need to readjust the tilt of the table.

On my saw, the table can tilt to the left 7° by adjusting the 90° stop. If your saw doesn't tilt in the opposite direction, you can simply tape a shim to one edge of the workpiece to tilt it the appropriate amount. Then you can make the opposite angle cuts (photo 5 inset).

REMOVING THE WASTE. With the sides of the pins defined, it's time to remove the waste between them. The photos below highlight the steps here. In photo 6 you relieve the narrow waste on the upper surface of the vise base. This keeps the waste from tearing out. For better access, flip the workpiece over and chop and pare away the waste where the waste is wider (photo 7).

Finally, take care of the shoulder waste. Cut the bulk of the waste away with a hand saw. Then grab a wide chisel and pare back to the baseline (photo 8).

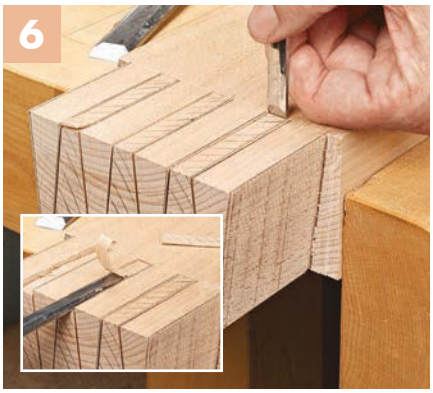

▲ To clear away the waste, define the baseline on the narrow side of the board and pare away a small amount (inset).

▲ Flip the board over and begin removing thicker chips using the same alternating chopping and paring cuts.

▲ For the shoulders, cut close to the line with a hand saw (inset), then trim back to the baseline with light paring cuts.

SHAPE THE TAILS

The tails make up the other half of the dovetail joint. In general, the process of cutting the tails follows the same order as the pins: layout, cutting the side, and chiseling the remaining waste.

TRANSFERRED LAYOUT. The layout process begins as before with establishing the baseline of the joints with a marking gauge. Then, rather than reach for a bevel gauge, pick up the workpiece that has the pins you just cut and trace the profile of the pins onto the face of the tail workpiece. I used a marking knife for this step instead of a pencil, as shown in photo 1 below.

There are two reasons for this. First, the thin knife blade is easier to get into the tight spaces between the pins. The second reason is that I want a very fine line to follow for cutting. A finer line helps you make a more precise cut and reduces the amount of cleanup work. Don't forget to mark the waste areas.

TAIL-CUTTING JIG. In order to cut the sides of the tails, the band saw table is returned to its 0° setting. And although you could make the tail cuts freehand, they will likely be inconsistent and require more cleanup work afterward.

As I mentioned earlier, a better way to approach them is to make a simple jig. You can see how it's made in the drawing above. It starts with a plywood base that sits on the saw table. A hardwood runner attached to the bottom slides in the miter gauge track of the table.

On the top face of the base is a dado that's perpendicular to the runner. This dado accepts runners attached to a plywood carriage. The carriage has a notch that's sized to accept the tail board. What's important about the notch is that it's set at an angle that matches the slope of the pins (7° in this case).

A pair of runners are attached to both faces of the carriage. This way you can cut both sides of the tails simply by flipping the carriage over.

CUTTING TAILS. After building the jig, it's time to put it to work. Set the jig on the saw table, place the workpiece in the notch and slide the carriage side to side to line up the first marked line with the blade. The key here is that you are cutting right on the waste side of the scribed line so you get a snug fit. When the workpiece is aligned, clamp the carriage to the base so it won't shift. Then turn on the saw and make a slow, steady pass down to the baseline, as you can see in photo 2 below.

Just like with the pins, repeat the alignment steps and make all the cuts at this orientation. When you're finished, remove the workpiece from the carriage and flip the carriage over, as in photo 3, and cut the other side of the tails.

REMOVING WASTE. Completing the cuts defines the tails. You now need to remove the waste between them. However, the narrow opening at the end of the tails makes the chisel method used on the pins impractical.

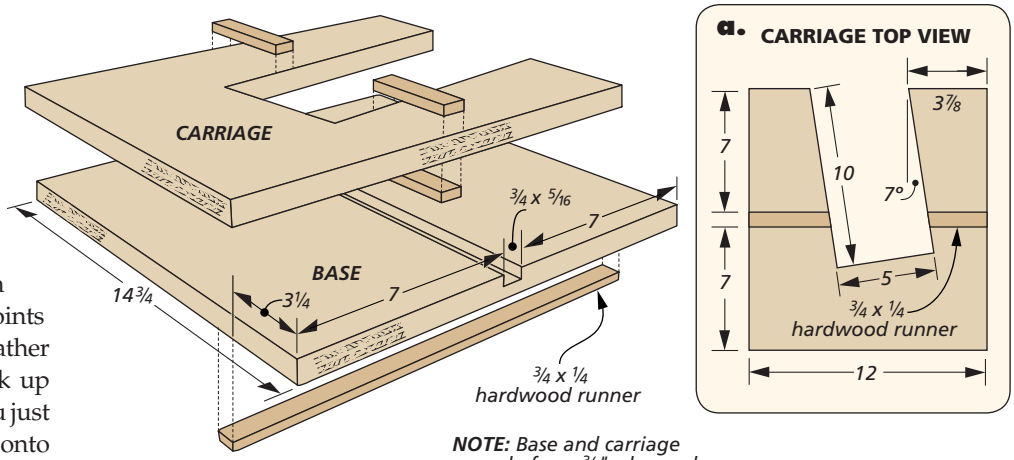

NOTE: Base and carriage are made from ¾" plywood. Runners are ¾"-thick hardwood

Band Saw Dovetail Jig

▲ Clamp the tail board to the pin board and transfer the shape of the pins to the jaw using a marking knife.

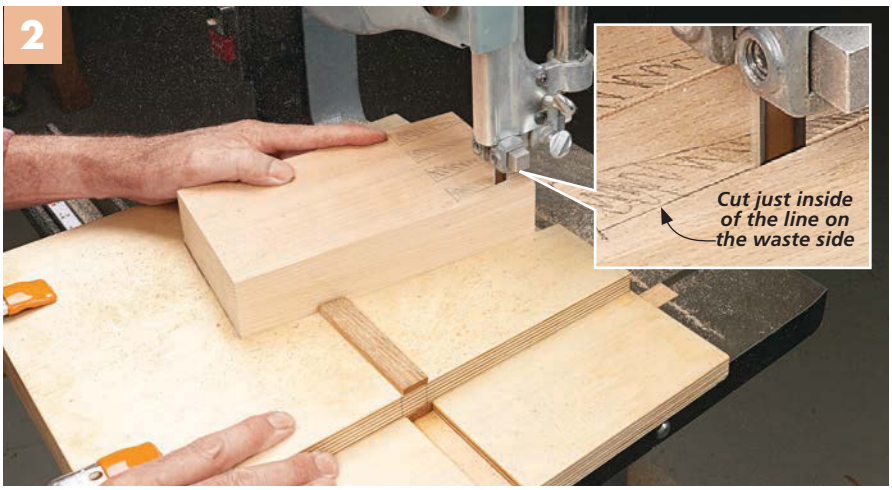

▲ Slip the tail board into the notch in the jig and slide the carriage to align the blade with the waste side of the line and clamp it in place with a couple spring clamps. Slide the whole jig forward to cut one side of the tail down to the baseline.

In order to cut the opposite side of the tails, flip the carriage over and repeat the cutting steps. Again, stay just on the waste side of the layout lines.

A couple of sweeping cuts frees the bulk of the waste between the tails. Turn off the saw to pull the waste from the slot.

My solution was to free the waste using the band saw. Photo 4 shows how to do this. Make a sweeping cut from the end of the workpiece down to a corner of the tail. The waste is trapped in the opening, so you need to turn off the saw and wait for the blade to stop in order to pull out each piece. A second cut in the opposite direction leaves only a small hump of waste along the baseline.

HANDWORK. With the band saw work completed, you can step over to the workbench and remove the waste with chisels, as in photo 5. Avoid the temptation to chop out all the waste in one set of passes. This approach can lead to the chisel being forced past the baseline, which would result in a gap.

Instead, make light cuts working back to the line. I find that on thick pieces like this, working in from each face keeps the chisels from cutting too deeply.

TEST FIT. Your careful work cutting at the band saw and paring with chisels should payoff when it comes to fitting the joints. The joints should begin to slide together or nearly so. Closely examine each edge to identify where you need to trim away material (photo 6). Mark the tight spots with a pencil.

I prefer to do any trimming work on the pins working across the grain. That's because the larger spaces between the pins make it easier to see where I need to trim. The spaces also offer better access with a chisel, too.

It shouldn't take too long before the joint slides together more. Following each test fit, look for burnished areas on the joint faces to identify places that need further attention.

Once you can get the joint more than halfway together with hand pressure, you're good to go. Several mallet taps should bring the parts together, as you can see in the photo below. Once they're glued up, the joint will stand the test of time and highlight your new skills. W

Back at the bench, use a chisel to pare away the remaining waste with chisels. Work from both faces of the workpiece.

Test fit the joint. If necessary, trim away material on the pins because they're easier to get to than the tails.

The end result is a tight-fitting joint that creates a square, rock-solid assembly and looks great.

rabbeting on the Jointer

One of the things I find interesting about woodworking is the fact that rarely is there only one way to accomplish a specific task. Take cutting rabbets, for example. You can cut them on a table saw using a dado blade buried in an auxiliary fence. You can also cut them with a standard blade by making two passes to define the shoulders of the rabbet. A third way is to rout them, either with a rabbeting bit or a straight bit paired with a router table.

In order to cut a rabbet on most jointers, you'll need to start by removing the cutterhead safety guard.

All of these methods work well and we use each of them routinely in our shop. But there's another method that doesn't seem to get talked about as much and that's cutting rabbets on a jointer.

BENEFITS. Using a jointer to cut rabbets has a number of benefits. For starters, a jointer produces a crisp, clean rabbet, without any scoring or blade marks. And by using a jointer instead of the table saw, you don't have to fuss with swapping out blades or changing a setup or rip fence setting that you may be using on your saw.

But the main benefit is that you can cut wide rabbets without having to make overlapping passes. The width of the rabbet you can cut on a jointer is limited only by the length of your jointer knives.

In order to cut rabbets on a jointer, your machine has to be equipped with a rabbeting arm. The rabbeting arm is just a small ledge that juts out from the side of the infeed table. It helps support the unrabbeted portion of the board as you're making the cut. A notch along the edge of the outfeed table provides clearance for the shoulder of the rabbet.

Use a steel rule to check to make sure all the jointer knives project from the end of the cutterhead by the same distance.

PROCEDURE. On most jointers, the first step is to remove the cutterhead guard.

To set the width of the rabbet, move the fence in or out accordingly. A steel rule can be used to measure the distance from the fence to the end of one of the knives. .

Deep rabbets should be cut in two or more passes. Start with the infeed table set for a shallow depth of cut and then lower the table after each pass. The depth scale can be used as a guide.

Depending on your specific jointer, this may be as simple as lifting the guard out of its mounting hole. On some jointers, it may involve loosening a set screw or removing a bolt or two (lower left photo on previous page).

Next, you'll want to make sure that all the knives on your jointer are flush with one another at the end. If they aren't, one knife will cut deeper (wider) than the others. The knives should also protrude slightly (about 1/16") past the end of the cutterhead. You can see this in the lower right photo on the previous page.

RABBET WIDTH. The next step is to position the fence of the jointer to establish the width of the rabbet. This is simply a matter of moving the fence in or out so that the exposed portion of the knives matches the desired width of your rabbet. I usually use a steel rule to check this, as shown in the upper left photo. Be careful when doing this, as the exposed knives are very sharp.

RABBET DEPTH. The depth of the rabbet is controlled by raising or lowering the infeed table. Shallow rabbets (1/8" or less) can generally be cut in one pass. For deeper rabbets, it's best to use two or more passes, lowering the infeed table after each one (right photo above). Even with multiple passes, the maximum depth of a rabbet you can cut on a jointer is limited by the depth of the clearance notch along the edge of the outfeed table. This is usually around 1/2".

Once you have the fence and infeed table in position, cutting the rabbet is simply a matter of passing the workpiece over the cutterhead as in a normal jointing operation. If I can, I prefer to stand the workpiece on edge, just because I feel that it gives me a little better control, as in the lower left photo.

If you have to lay the workpiece flat to cut a rabbet, make sure that your workpiece is adequately supported by the rabbeting arm and use push blocks to guide the workpiece over the cutterhead (main photo on previous page).

END RABBETS. A jointer can also be used to cut a half lap or tenon on the end of a narrow workpiece. To do this, make sure that you use a backerboard to keep the workpiece square to the fence as you guide it over the knives, as shown in the lower right photo.

If you own a jointer and have never thought about using it to cut rabbets, give it a try. I think you'll be surprised at how easy and effortless it is. And you may just decide that it's your new favorite method. W

When possible, cut the rabbet with the workpiece standing on edge. For wider rabbets, it may be necessary to cut the rabbet with the workpiece lying flat (main photo on opposite page).

To cut a rabbet or half lap on the end of a workpiece, use a backerboard to help hold the workpiece perpendicular to the jointer fence and guide it past the cutterhead.

basic kit of Metalworking Tools

In the course of becoming a better woodworker, I've picked up a few other skills (and tools) in related areas. One of those is metalworking. Whether it's modifying a piece of hardware or creating a custom component, having some metalworking abilities can help you create better woodworking projects.

What's nice is that you don't need a lot of expensive tools to get started. (You may have a few of them already.) Metalworking follows the same kinds of processes as in woodworking: layout, drilling, cutting, and shaping. Most of the tools here can easily be found at hardware stores, home centers, or online.

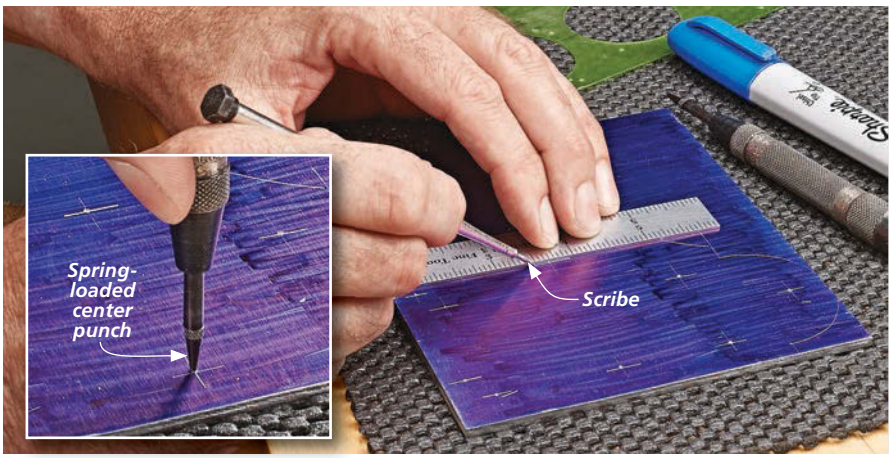

▲ A scribe creates a fine layout line when used in conjunction with rules and squares. Coloring the surface of the metal with a permanent marker allows the scribed marks to stand out for easier visibility. A center punch (inset) is used for marking hole locations.

LAYOUT

One of the first steps of building any project is layout. The key here is making clear marks that guide the way for the subsequent steps. Two trouble spots can trip you up. First, the hardness of metal makes it difficult to make a mark. In addition, the reflective surface of the piece of metal may prevent you from seeing the marks well. The tools you need for this job are shown in the left photo.

MARKER. In order to have marks show up clearly, color the surface with a permanent marker (I prefer blue). This creates a uniform surface so your marks stand out in contrast.

SCRIBE. As for the markings themselves, a scribe and a spring-loaded center punch are all you need. The scribe does the lion's share of the work, scratching through the marker color to create lines. Just like in woodworking, rules, circle templates, and squares guide the scribe for straight, accurate marks.

CENTER PUNCH. Another layout tool I use is a spring-loaded center punch. As the

name implies, it's used to mark center-points for holes. Rather than striking the punch with a hammer, all you do is position the punch in the proper location and press down. As you press, an internal spring compresses until it's released to drive the punch and form a small dimple — quick, easy, and precise.

DRILLING

Once the layout work is complete, you can get started on turning the blank piece of metal into a project component. For me, the next step is to drill any necessary holes. With the workpiece still square, aligning the bit and securing the workpiece is more straightforward.

TWIST BITS. When accurate holes are called for, a drill press is the tool to turn to, as in the upper right photo. Standard twist bits are designed for metalworking and are inexpensive. The marks left by the center punch register the bit for accurate placement.

Like the old saying goes, slow and steady wins the race when drilling. Keep the drill press speed low and lubricate the bit with cutting fluid or *3-in-One* oil for creating smooth holes.

The other piece of advice is to make sure the workpiece is fully secured. Whenever possible, I like to use a fence at the drill press to both line up the workpiece and keep it from shifting.

COUNTERSINKS. A second drilling tool that's necessary in working with metal is a countersink. In addition to creating a chamfer for recessing a screw, I use a countersink to debur the edges of holes.

▲ The dimple left by a center punch keeps a twist bit from wandering as you start drilling. This will guarantee accurate hole placement (inset photo). A countersink bit creates a smooth chamfer to seat a flat-head screw flush with the surface of the material.

CUTTING & SHAPING

While I often turn to power tools to shape wood parts, with metal, hand tools are a better choice. And since the parts are usually small, the cutting and shaping doesn't take much time.

HACK SAW. The heavy lifting of shaping falls to my hack saw, as shown in the main photo on the previous page. What's important here is the blade. High-quality blades (*Starrett* and *Lenox* are good brands) last longer and cut smoother than inexpensive blades, which can dull quickly.

MACHINIST'S VISE. In order to cut accurately, you need a way to hold the workpiece securely. A machinist's vise does the trick. The vise swivels to give you the best access to the workpiece. Most vises even have a small anvil area on the back for peening metal parts.

THREE FILES. The tools I use for shaping metal are a set of three files, as shown in the photos at left and below. With just these three file shapes, you can tackle most tasks. Files that are 8" to 10" long are a good starting point. Bastard-cut files balance a quick cutting action with leaving a fairly smooth surface.

With just a handful of tools, you can shape metal parts to add to your projects. That opens up all kinds of possibilities for customizing your work. W

▲ A half-round file combines two profiles in one to shape flat and gently curved surfaces. Add a round file and a triangular three-square file to the mix to form tighter radii and finer details. A machinist's vise secures the workpiece and gives you good access while working.

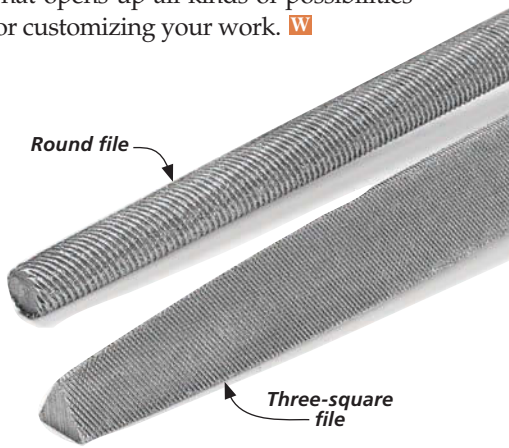

simple steps for

Avoiding Tearout

Getting crisp, splinter-free edges at the table saw or router table doesn't happen by accident. The wood fibers typically separate just fine when cutting with the grain of a workpiece. However, when cutting or routing across the grain, precautions need to be taken to avoid tearing the back side of the workpiece as the cutting tool exits. Employing just a few simple strategies at each of these tools will help you see better results without much extra effort.

▼ Between the alternating teeth and the steep tooth angle, an ATB blade helps to produce clean crosscuts.

TABLE SAW STRATEGIES

The first thing that you need to do to set up for successful crosscutting on the table saw is to ensure that you have the proper blade in place. While a combination blade may be fine for run-of-the-mill work, it won't necessarily deliver the tearout-free results you're looking for.

The steep tooth angle of an alternate top bevel (ATB) blade (left photo), which is specifically designed for crosscutting, slices through the wood fibers producing a cleaner cut. After selecting the proper blade for the cut, you'll want to consider a couple of add-ons to your table saw to guarantee success.

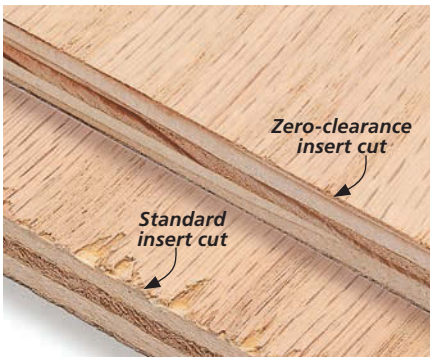

▲ The cut produced using a zero-clearance insert (top) is superior to the cut made with a standard insert (bottom).

ZERO-CLEARANCE INSERT. Switching to a zero-clearance insert is an inexpensive way to help alleviate tearout (main photo above). The slot in this insert is made using the saw blade itself, leaving no gap between the blade and the sides of the insert. This works to

provide support for the wood fibers on the bottom face of the workpiece, reducing tearout. It's best to have a zero-clearance insert for each blade you own. The article on page 62 shows some simple tips for making your own zero-clearance inserts in the shop.

AUXILIARY MITER GAUGE. While the zero-clearance insert provides support on the bottom of the workpiece, an auxiliary miter gauge fence provides the same support at the back edge of the workpiece. You can see an example of one of these fences in the main photo on the previous page.

Auxiliary miter gauge fences can be as long, or as short, as you need for the task at hand. If you need to keep the cutoff piece, as well as the main workpiece, then the auxiliary miter gauge fence should extend past the blade on the cutoff side far enough to support the whole workpiece past the blade.

▲ To eliminate tearout at the router table, always try to remove material in small amounts rather than all at once. The left photo shows a starting pass, while the final pass (right photo) should only be a "skim" pass, removing just enough to achieve full depth.

ROUTER TABLE STRATEGIES

When working at the router table, improper technique can play a large part in causing tearout. Trying to remove too much material in one pass is a sure-fire way to cause tearout. The better method is to make multiple, shallow passes to remove material (upper right photos).

Also, the proper feed rate is important for clean work at the router table. Moving too fast (or too slow) can also result in a ragged edge. Beyond technique, here are a couple of other strategies to try at the router table to help prevent tearout.

USE BACKERBOARD. Much like the auxiliary miter fence helps to stop tearout at the table saw, using a backerboard on the router table helps to achieve the same result (lower left photo). A backerboard is nothing more than a scrap piece of wood that is at least as thick as the workpiece.

As you push the workpiece through the router bit and into the backerboard, the wood fibers are fully supported, preventing tearout. This technique is especially helpful when routing end grain.

REDUCE FENCE OPENING. Using a fence with a small opening is another way to help prevent tearout. The idea is to make the area around the cutting edges of the router bit as small as possible to fully support the workpiece. In some cases, you can even create a "zero-clearance" fence, just like on the table saw.

For bearing-guided bits, trace the profile on a piece of hardboard and cut it out. For some straight-cutting bits, you can simply raise the spinning bit up through the auxiliary fence. You can see an example of this in the lower right photo.

If the devil is in the details, then creating smooth, clean cuts is the primary aspect that you should pay attention to on a project. Just take the little extra time needed when performing these operations and your work will see the noticeable benefits. W

▲ A backerboard trailing the workpiece provides full support for the wood fibers. The backerboard should be at least as thick as the workpiece for a clean, tearout-free cut.

▲ A zero-clearance fence at the router table works much the same way as a zero-clearance insert on the table saw. For straight-cutting bits, simply raise the spinning bit into the fence.

5 tips for making Zero-Clearance Inserts

One of the easiest ways to improve both the quality of cuts and safety of your table saw is to use a zero-clearance insert plate. By providing support right next to the blade, the insert plate helps prevent tearout when making crosscuts in hardwood and plywood and cutting dadoes. It also keeps small waste pieces from falling between the insert plate and blade and getting wedged.

While you can purchase insert plates, I find that it's pretty simple to make your own. In addition to saving money, it's easy to make extras to keep on hand to suit just about any task. I prefer making insert plates from ½" MDF, as you can see in the photos on these two pages. It's flat, smooth, easy to shape, and inexpensive. The initial shaping of the insert is straightforward, but there are some simple details you can add to improve the performance of the insert.

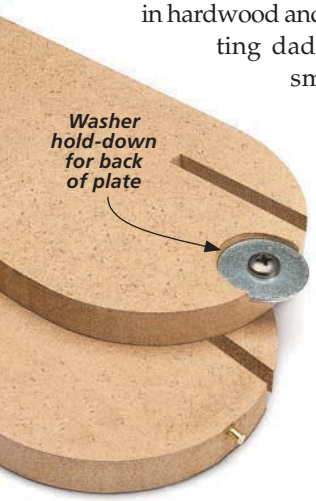

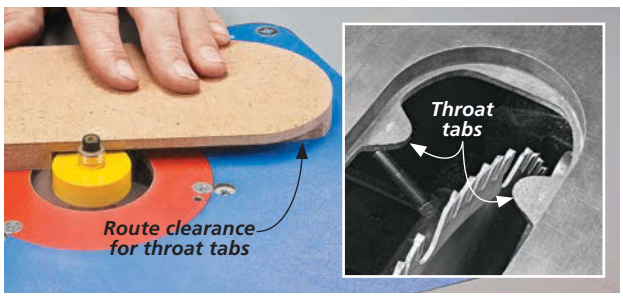

▲ Use a rabbeting bit in the router table to relieve the underside of the insert plate to sit flush with the saw table. The tabs on the inside of the blade opening serve as a guide.

[1] Custom Inserts

To create, insert plates, I like to use the stock insert as a template. With a flush trim bit in the router table, you can quickly make perfectly sized plates.

It pays to take a close look at the stock insert (or a commercial zero-clearance plate) for other details to include. A couple of examples are shown in the left photos. The back end of the plate may have a pin or tab that keeps the plate from lifting up during cutting. You can add a cut-off screw or a washer to serve the same function (far left photo).

Insert plates rest on tabs formed in the blade opening in the saw table.

▲ Thread small set screws into the insert plate. This allows you to adjust the fit of the plate while it's in place.

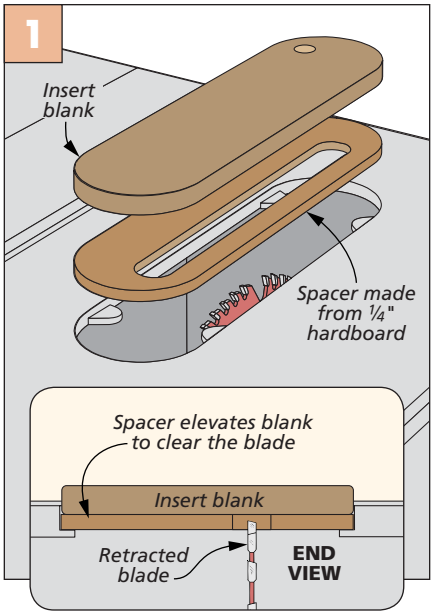

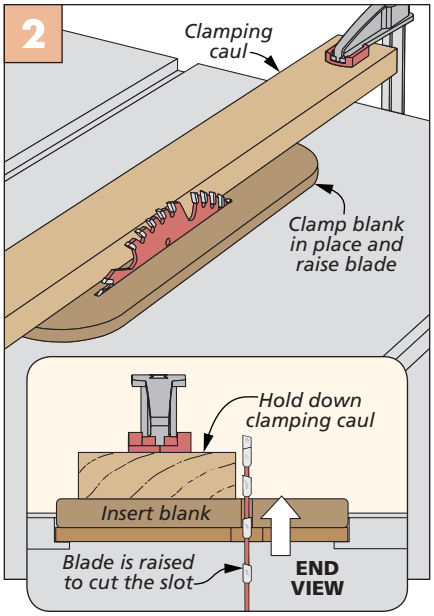

These tabs may be less than ½" below the surface. Rather than make a thinner plate, a better idea is to cut a rabbet around the underside of the plate so that it can sit flush with the surface, as shown in the right photo on the bottom of the previous page. This allows the plate to be thicker and as a result, more rigid.

[2] Add Set Screws

Minor inconsistencies in the tabs that support the insert plate may prevent the plate from sitting flush. This could also mean the plate rocks, which could cause a workpiece to catch during a cut.

I'd prefer to not to fiddle with the fit of each plate when I want to use it. A simple solution is shown above. Install four small set screws around the perimeter of the plate. This way, you can fine tune the height of the plate so it sits flush with the saw table and is more stable.

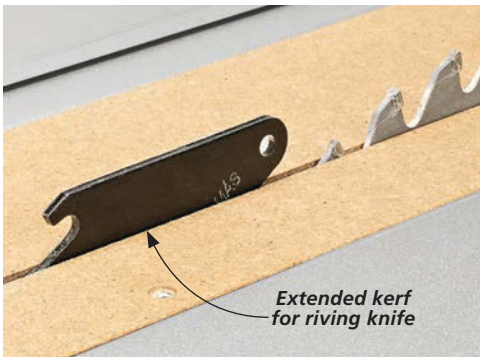

▲ If your table saw comes equipped with a riving knife, extend the blade kerf in your insert plate to accommodate its use for rip cuts.

[3] Start the Kerf

The whole point of a zero-clearance insert is that it's matched to a specific blade. So once you make the insert, you need to cut a kerf in it. The problem is the blade on many saws don't retract low enough to allow the blank insert to rest on the tabs. The solution is to make a thin spacer to raise the insert temporarily. The two drawings above show how the spacer works to cut the kerf.

[4] Splitter & Riving Knife Slot

Zero-clearance inserts really shine for stopping tearout when making crosscuts. But I use one when making rip cuts, as well. However, it's easy to overlook a key safety measure when making your own inserts. And that's to use a plain insert and skip using the splitter or riving knife that came with your saw.

However, it doesn't take long to remedy the situation. The inserts shown in the photos on the previous page have a notch cut out at the back. This accommodates the blade guard/splitter common to many older table saws.

Newer saws incorporate a riving knife that rises with the blade. For these, the solution is even easier. All you need to do is extend the blade kerf back to allow the riving knife to pass through the insert just behind the blade, as you can see in the photo at left.

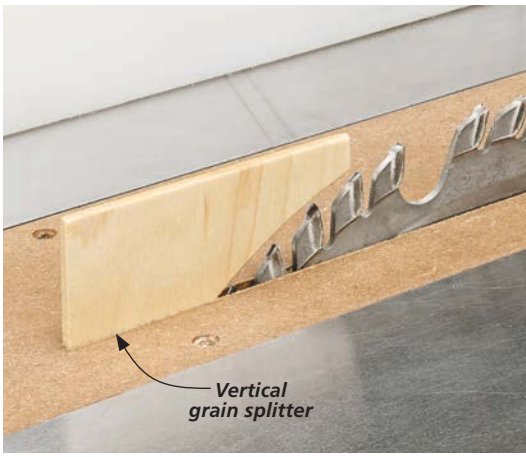

▲ A hardwood splitter glued right behind the blade minimizes the gap between the blade and splitter, increasing safety.

[5] Add a Splitter

Another option is to simply make an insert with a built-in splitter (photo above). Placing the splitter close to the blade increases safety by reducing the chance the kerf can pinch the blade.

After making a blade slot, glue a hardwood strip into the back edge of the slot with the grain running vertically. Lower the blade, turn on the saw, and raise the blade. The blade shaves the splitter for a close match. To keep the gap between the blade and splitter as small as possible, I dedicate inserts to specific stock thicknesses (⅝"-1", for example).

Applying simple steps creates a better insert. With it in place, you can make safer and more accurate cuts. W

tips from our shop

Shop Notes

Routing Pockets

The three game boards that are being built in this issue have one thing in common — pockets. Each of the games has pockets routed into them. The checkers and cribbage boards use the pockets to store playing pieces when not in use. The pockets for the mancala game do double-duty. They store the stones and serve as an integral part of the playing surface.

Making these pockets is best done with a router and a bowl and tray bit. You can learn more about these bits on page 12. To give me a little more control, I made a set of jigs that allowed me to rout the pockets on the router table. The mancala game has the most pockets to make, so I started there.

MANCALA JIG

The mancala game board shown on page 18 has seven pockets in both halves of the game. As you can see in detail 'a' below, the jig includes a template in the lower half that the bearing on the router bit rides against. The upper half of the jig firmly holds the workpiece while routing the pockets (inset photo above).

To use the jig, place it over the bit in the template cavity that you want to rout. Set the bit height by measuring off the top of the template. (To prevent burning, make three shallow passes for each pocket.) Lower the workpiece onto the bit as shown in the photo above to start each pocket.

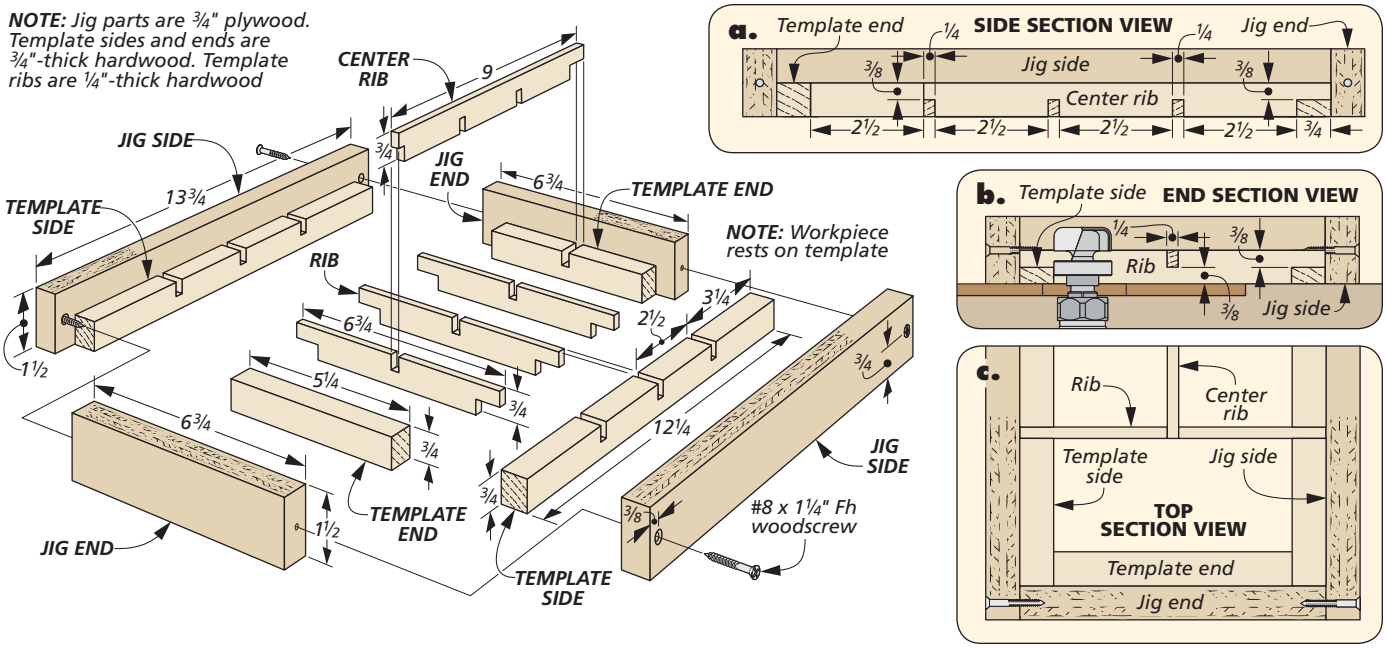

Checkerboard Jig

The checkerboard on page 20 has a pocket carved on the inside face of one half to create a storage compartment for the checkers. This is the largest of all the pockets to be made. So once I lowered the board into the jig, I eased my way to the perimeter and followed the contour of the pocket all the way around. From there I worked my way slowly across the field of the pocket.

SHALLOW PASSES. It's tempting to hog out the hole pocket in one pass, but not advisable. The time spent routing the cavity in multiple passes means less time spent removing burn marks later.

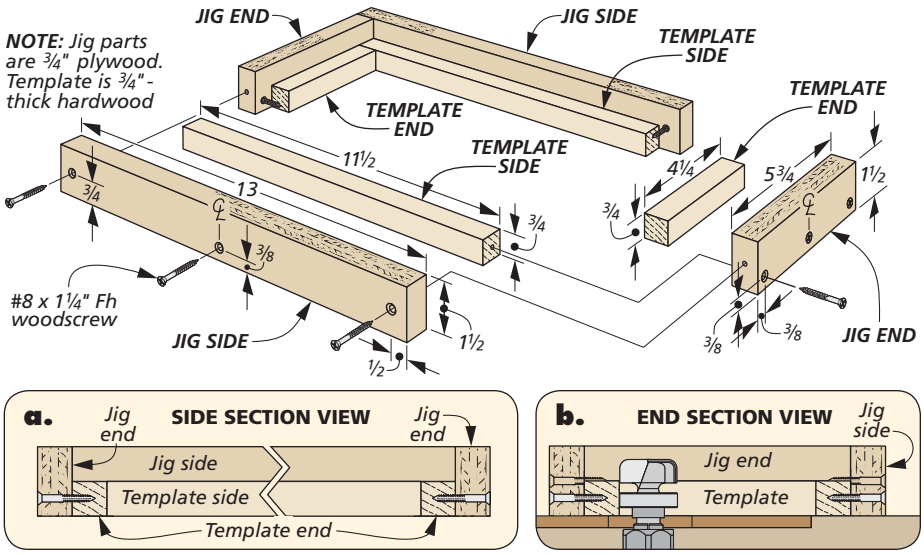

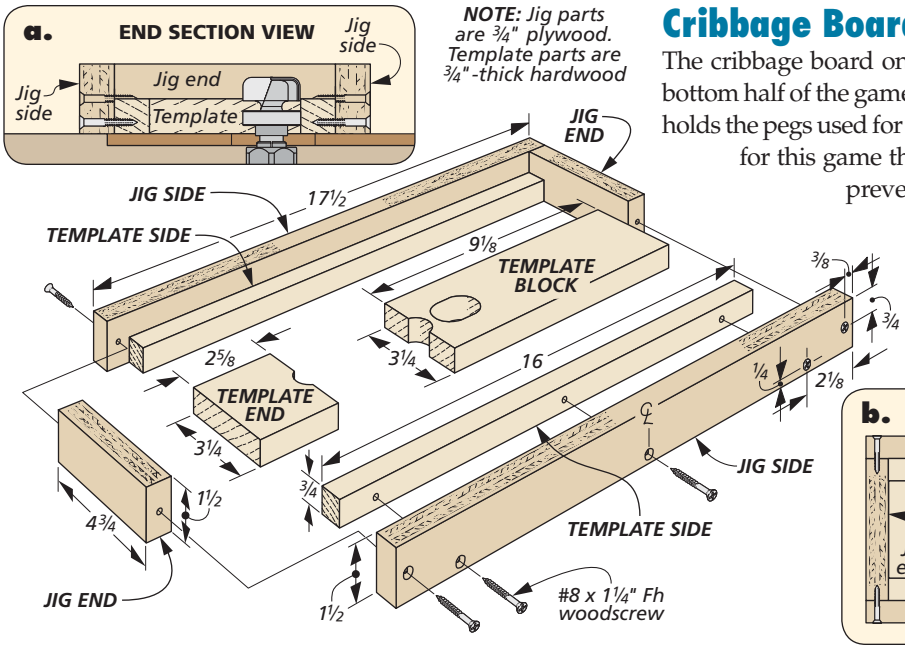

Cribbage Board Jig

The cribbage board on page 22 has two compartments routed in the bottom half of the game. The larger one holds a deck of cards. The other holds the pegs used for playing the game. I started by routing the pocket for this game the same way I did the others, shallow passes to prevent burning. One thing to note: the pocket for the pegs is only ⅝" deep, so you're going to finish it before the larger pocket. The depth of the larger pocket depends upon your playing cards. You'll need to have them on hand to ensure they sit flush with the surface.

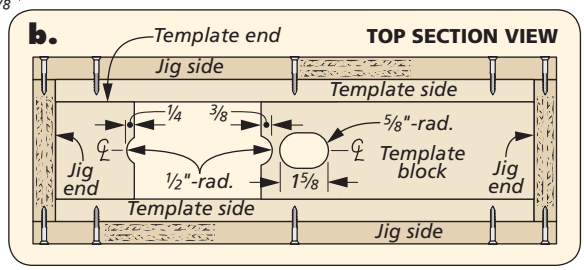

Peening Rivets

Several of the metal components on the vise on page 34 are joined together with steel rivets. The overall process is pretty simple. The rivets are cut slightly long, slipped into the hole, and hammered to swell the rivets.

For the rivets in the hub and handle, things are a little different. To keep the rivets centered in these round parts, I used a machinist's vise to squeeze the rivets to keep them from slipping. Then you can hammer the rivets using the anvil on the back of the vise (Figure 1a). To smooth the mushroomed end, file the surface smooth (Figure 1b). W

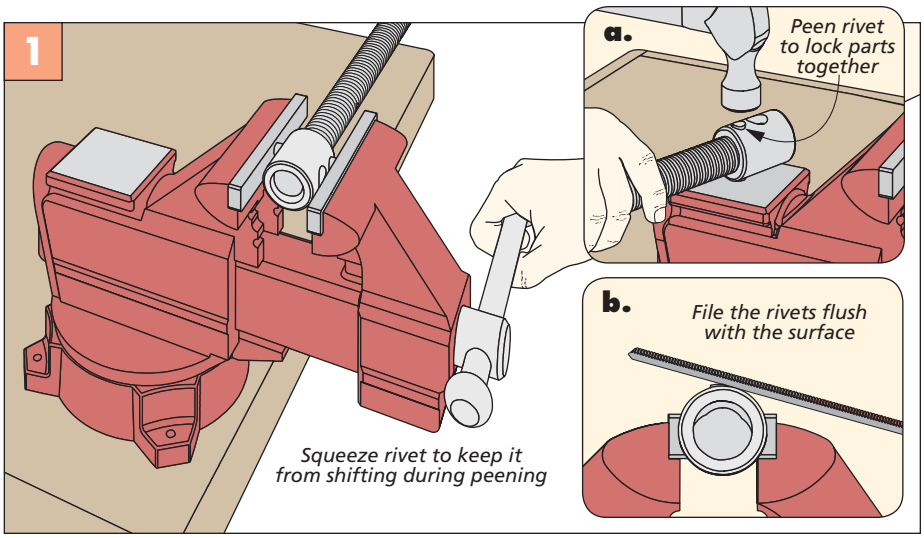

questions & answers

Acme Threaded Rod

I notice that some of your projects call for "Acme" threaded rod. But when I ask for this at my local hardware store, I just get a blank stare. What is it, and where can I find it?

Richard Hagood
Pickens, South Carolina

Acme threaded rod sounds like something Wile E. Coyote might use to construct a trap for the Roadrunner. But in fact, this type of rod is commonly used in all sorts of everyday machinery and industrial applications.

As you can see in the photo at left and the drawings at right, the profile of an Acme thread is different from that you'll find on typical threaded rod. Standard threaded rod has V-shaped threads that are cut at a 60° angle and form sharp peaks. Acme threads have a trapezoidal shape with a steep, 29° thread angle and a flat top.

▲ Unlike standard V-threads, Acme threads are flat on top, and have a trapezoidal shape.

STRENGTH. Because they're thicker in cross section, Acme threads are stronger and less prone to stripping than common V-threads. This makes them better suited for heavy loads. They're often used for motion and power transfer on machinery, such as lead screws, screw drives, and conveyors. You'll also find Acme threads on clamps, vises, jacks, and even stools, like the one shown below.

SPEED. Another feature of Acme threaded rod is that it has a larger thread pitch (fewer threads per inch) than the equivalent diameter of V-threaded rod. So it requires fewer turns to tighten or thread a nut onto the rod. This can be a real timesaver for clamps or vises.

For shop projects (like the vise shown above and on page 34), we like to use Acme threaded rod if the part is going to be routinely subjected to a lot of stress and heavy loads. Of course, you'll also have to use a matching Acme nut with the Acme threaded rod.

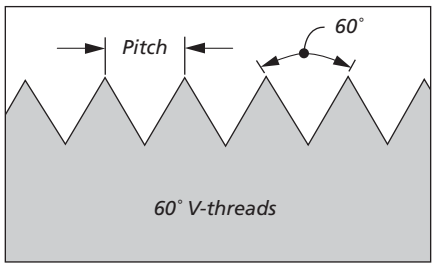

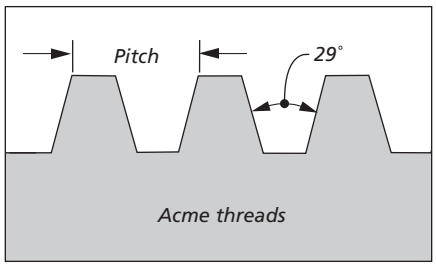

SOURCES. You probably won't find Acme threaded rod and nuts at your neighborhood hardware store or home center. However, Acme components are available from a number of online supply companies, such as *McMaster-Carr*, *MSC*, or *Essentra Components*. W

▲ Acme threaded rod is ideal in applications that must withstand heavy loads, such as this height-adjustable workbench stool.

hardware & supplies
Sources

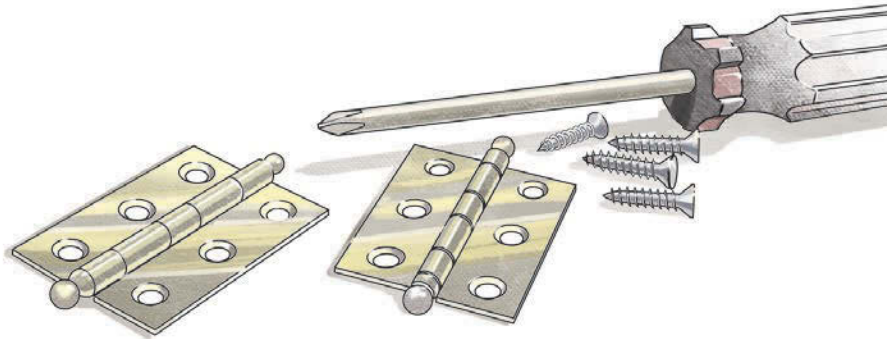

Most of the materials and supplies you'll need to build the projects are available at hardware stores or home centers. For specific products or hard-to-find items, take a look at the sources listed here. You'll find each part number listed by the company name. See the right margin for contact information.

BOWL & TRAY BITS *(p.12)*

- **Woodcraft**
  Whiteside Bowl Bit 825834
- **Amana Tool**
  Bowl & Tray Bit 45992
- **Lee Valley**
  Dish Carving Bit 16J26.70

GADGETS UNDER $50 *(p.14)*

- **Rockler**
  Assembly Square 29190
- **Lee Valley**
  Countersink Drill Bits . .50J04.20
  Tape Measure Tip 50K58.01
  Vix Bits 66J08.31
  Corner Chisel 50S01.01
  Tethered Pencil Holder .61N05.30
- **Duluth Trading**
  Thread Repair Tool 69165

BOARD GAMES *(p.18)*

- **Lee Valley**
  10mm Barrel hinge . . . 00H36.10
  10mm Forstner Bit 06J72.10
  3/8" Magnets 99K32.03
- **Infinity Cutting Tools**
  Radius Grooving Bit. 58504
- **Rockler**
  Checker Pieces. 21758
  Cribbage Pegs 21741

I purchased the deck of cards and stones for the mancala board at a local hobby store. I used a wipe-on oil for the mancala game board. The checkerboard is stained with *General Finishes* "New Pine" and "Java" gel stains. The cribbage board is stained with a mixture of three parts *Zar* cherry stain and one part *Wood Kote Jel'd* stain (cherry). Then it (and the checkerboard) was sprayed with two coats of lacquer.

TABLE SAW CART *(p.24)*

- **Essentra Components**
  Pulls KHO-5
- **The Home Depot**
  2" Casters F24785
- **Lee Valley**
  26" Drawer Slides 02K30.26
  120° Hinges 00B15.20

The storage cart was finished with two coats of lacquer.

PICTURE FRAMES *(p.30)*

The glass, turnbuttons, and sawtooth hangers for the frames were purchased at a local hardware store. The Craftsman frame is finished with two wipe-on coats of *General Finishes Arm-R-Seal* oil and urethane topcoat (satin). The modern frame has no stain on the stiles and rails and uses ebony dye by *General Finishes* on the inlay. Then I sprayed on a couple coats of clear lacquer. The Asian frame has lacquer only.

CARVING VISE *(p.34)*

- **McMaster-Carr**
  Acme Screw 98935A861
  Coupling Nut 93023A667
  Oversize Washers . . . 91201A038
  Steel Bar 8910K268
  Steel Bar 9517K367
  Steel Rod 89905K12
  Handle. 91044A036
  1" I.D. Spacer 92415A178
  5/8" I.D. Spacer 92415A148

HALL BENCH *(p.42)*

- **Organize-It**
  Medium Baskets . .010591479703
- **Lee Valley**
  Magnetic Latches 00S33.32
  Partial-Wrap Hinges . 01H31.62
  Garment Hooks. 00W86.51
- **Rockler**
  Door Pull 1007434

The barn boards for the hall bench were purchased online from *Midwest Barn Boards*. Before installing, they were finished with two coats of lacquer. After priming the bench, it was painted with two coats of *Benjamin Moore* "Aura" in Amherst Gray (HC-167).

The Complete *Woodsmith* Magazine Collection *1979 to 2016*

- ✓ **Access Every Issue, Article, Photo, and Illustration Ever Published!**
- ✓ **Every Plan, Tip, and Technique, Everything You'll Ever Need!**
- ✓ **Instant Online Access on Your Computer, Laptop, Tablet, or Smartphone!**

Item #WL06U

Woodsmith, The Complete Magazine Collection on USB Flash Drive...$99

MAIL ORDER SOURCES

Project supplies may be ordered from the following companies:

Amana Tool
800-445-0077
amanatool.com

Benjamin Moore
855-724-6802
benjaminmoore.com

Duluth Trading Co.
866-300-9719
duluthtrading.com

Essentra Components
800-847-0486
essentracomponents.com

General Finishes
800-783-6050
generalfinishes.com

The Home Depot
800-466-3337
homedepot.com

Infinity Cutting Tools
877-872-2487
infinitytools.com

Lee Valley
800-871-8158
leevalley.com

McMaster-Carr
630-833-0300
mcmaster.com

Midwest Barn Boards
317-207-2276
midwestbarnboards.com

Organize-It
800-210-7712
organizeit.com

Rockler
800-279-4441
rockler.com

Woodcraft
800-225-1153
woodcraft.com

looking inside
Final Details

▲ *Hall Bench.* Reclaimed barn boards and wire baskets give this hall bench a rustic look. But solid joinery and construction ensure it will last for years. Find out more on how it's built by turning to page 42.

▲ *Picture Frames.* All three of these picture frames sport a unique look. The common theme among them is that none of them require cutting any miters. See how they go together by turning to page 30.

▲ *Auxiliary Vise.* This adjustable vise quickly mounts in any existing dog hole in your benchtop, giving you versatile clamping options for carving or holding odd-shaped workpieces. Turn to page 34 for step-by-step plans.

◄ *Table Saw Storage Cart.* This cart is just the right height to tuck under the extension wing of your table saw. Inside, you'll find plenty of room for storing blades, inserts, and other gear. Plans begin on page 24.